CORPORATE PROFILE

Hydraulic & Pneumatic Clamping Systems

㈜케이제이에프에 방문해 주신 것을 진심으로 환영합니다.
㈜케이제이에프는 토글 클램프, 유압/공압 클램프를 비롯해 로타리 조인트, 부스타, 워크서포트, 스위블 패드, 플로우 컨트롤 밸브 등 워크홀딩 시스템에 필요한 다양한 제품을 전문적으로 생산하는 업체입니다.
부산소재 본사와 서울지사를 두고 있으며 언제나 고객과 함께 고객의 입장으로 제품을 제작하는데 최선을 다하고 있습니다. 한치 앞을 내다 볼 수 없는 무한 경쟁 세계에서 국내뿐만 아니라 해외시장으로 뻗어 나가기 위해 임직원 모두가 힘을 합쳐 일하고 있습니다.

1984년에 설립된 이래 30년이 넘는 시간 동안, 밀링 전용 픽스쳐, 용접 자동화 설비, 검사구, 조립 자동화 라인, 반도체 조립시설, 지그 & 픽스쳐, 가공 전용기 등에 들어가는 유압/공압 자동화 클램프 연구 개발에 앞장서서 치공구산업에 필수인 요소부품을 생산하기 위해 계속적으로 투자하고 있습니다.

표준화된 요소부품은 자동차, 지그, 통신기기, 광학기기, 섬유, 농업기계, 진공장비, 화학공업, 항공기기, 고무, 조선, 가정용전자기기, 중전기기, 원동기, 중작업용 기기, 철도, 식품기계 등에 매우 중요한 부분입니다. 생산되는 제품의 전수 품질검사를 통해 불량률을 최소화 하고 있으며, 경쟁력 있는 가격 및 정밀도나 효율성에서 자사 제품이 최고라 자부합니다. 표준 클램프 제품 이외에, 고객의 작업 환경에 따라 요구되는 스페셜 사양에 대해서도 신속하고 정확한 솔루션(solution)을 제공하고 있습니다. 문제 해결에 대한 자문이 필요하시면 언제든지 연락바랍니다.

케이제이에프는 정성을 다해 전 제품 생산에 임하고 있으며 품질향상과 효율을 높이기 위해 불철주야 노력하고 있습니다. 애정과 관심으로 지켜봐 주시고 여러분의 성원에 보답하기 위해 최선을 다하겠습니다.
감사합니다.

KJF is a manufacturer specializing in products for work holding systems, including toggle clamps, hydraulic/pneumatic clamps, rotary joints, boosters, work supports, swivel pads and flow control valves etc.. Headquartered in Busan with a branch office in Seoul, we endeavor to create products manufactured from the customer's perspective. In the era of limitless competition, the KJF team is dedicated to expanding company operations into overseas markets.

Established in 1984, we have been leading the research and development of hydraulic/pneumatic automation clamps for milling fixture, welding automation facility, inspection jig, assembly automation line, semiconductor assembly facility, Jig & fixture, machining center etc. for more than 30 years, and we are investing continuously in manufacturing essential parts for the jig & fixture industry.

Standardized components are critical parts of the automotive, jig & fixture, telecommunication equipments, optic equipments, agriculture machines, vacuum equipments, chemical industry, aviation equipments, rubber, ship building, household electronic equipments, heavy electric equipments, motor, heavy duty equipments, railroad industry, grocery machines etc..

We minimize defect rate through quality inspection of products, and as a result we, are fully confident in our products in terms of precision, efficiency, and price. In addition to standard products, we also provide swift and accurate solutions for custom specifications.
We are standing by to assist you with any inquiries and troubleshooting.

KJF is focused ceaselessly on improving product quality and efficiency. We will continue to exceed expectations on a solid foundation of your continued interest and support.
Thank you.

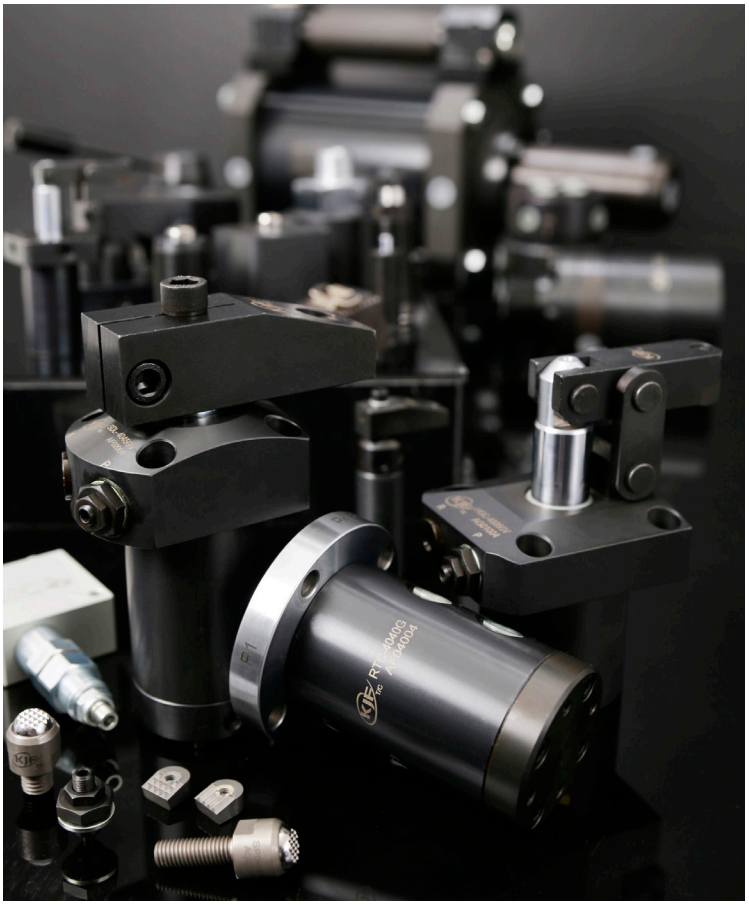

Work Support Applications

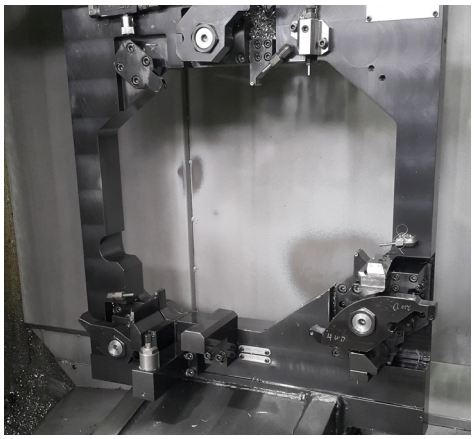
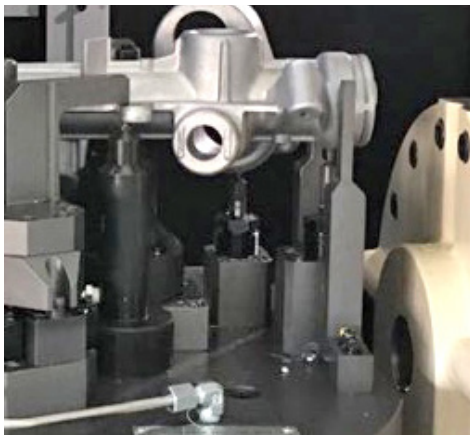
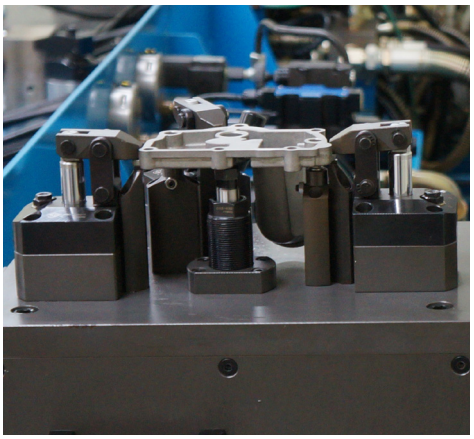

Work Support Types

NEW

Low Pressure Built-In Type(M30)

NEW

Low Pressure Built-In Type(M36)

NEW

Low Pressure Flange Type(ø55)

Block Type

Work Support Introduction

워크써포트는 가공부하로 인한 공작물의 처짐 또는 떨림을 해결하는 도구입니다. 워크써포트를 사용했을 때, 공작물의 가공정밀도 유지와 공구 떨림을 줄여서 공구의 수명을 연장할 수 있습니다.

Work Support prevents chatter and deformation caused by cutting load during machining workpiece. Since it maintains machining accuracy of workpiece and reduces tool vibration, tool life is extended.

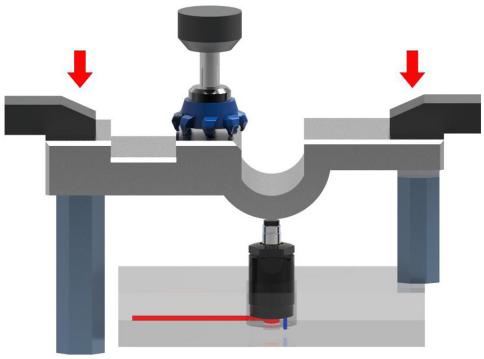

Action Description

Spring Advance (1단)

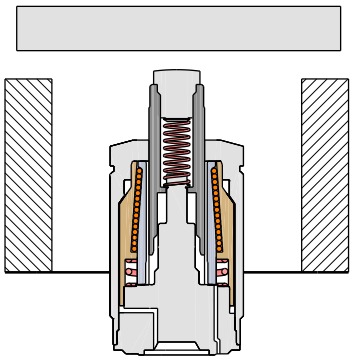

Hydraulic Pressure : Off

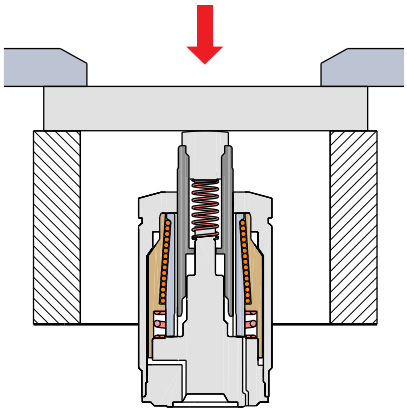

Hydraulic Pressure : Off

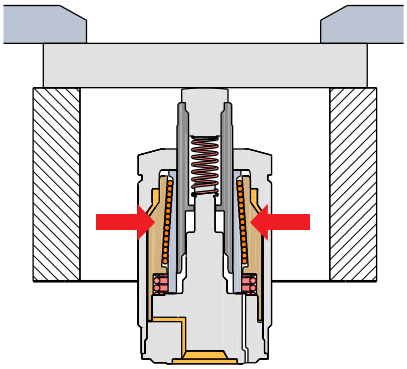

Hydraulic Pressure : On

Hydraulic Advance (2단)

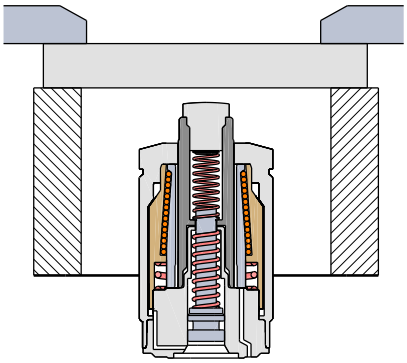

Hydraulic Pressure : Off

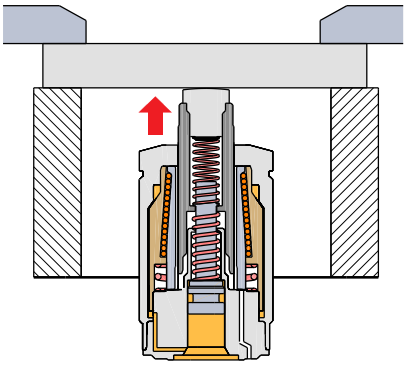

Hydraulic Pressure : On

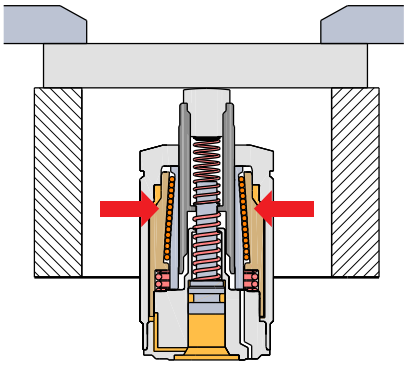

Hydraulic Pressure : On

Work Support Applications

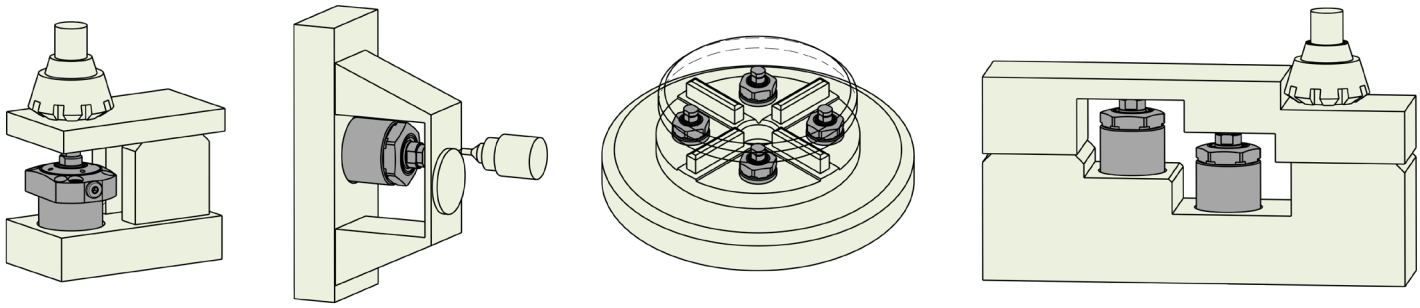

Model No.

CWS-20122FG

CWS	–	20	12	2	FG
1		2	3	4	5

1 CWS = Work Support

2 Plunger Diameter
ex) 20 = ø20

3 Stroke
ex) 12 = 12mm

4 Action Type
ex) 1 = Spring Advance
2 = Hydraulic Advance

5 FG = Flange Gasket Type

★ **Air Purge Function**

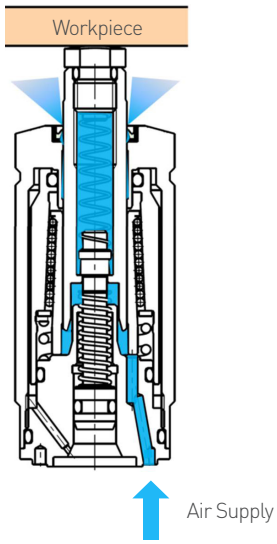

Specification

Low Pressure Work Support

MODEL NO.	CWS-12081	CWS-12082	CWS-15081	CWS-15082	CWS-20122FG
Type	Built-In	Built-In	Built-In	Built-In	Flange
Operation Method	Spring Advance	Hydraulic Advance	Spring Advance	Hydraulic Advance	Hydraulic Advance
Support Force(kgf) at 70kgf/cm^2	407.9	407.9	560.8	560.8	1580.6
Plunger Stroke (mm)	8	8	8	8	12
Plunger Diameter (Ø)	12	12	15	15	20
Oil Capacity(cm^3)	4.3	8.4	9.7	16	28.5
Plunger Spring Froce (kgf)	0.3~0.5	0.3~0.5	0.95~1.40	0.95~1.40	0.96~1.75
Operating Pressure Range	25 ~ 70 kgf/cm^2				
Operating Temperature Range	0 ~ 70°C				
Weight (kg)	0.28	0.27	0.38	0.37	1.3

Supporting Force Graph

CWS-12081 & 12082

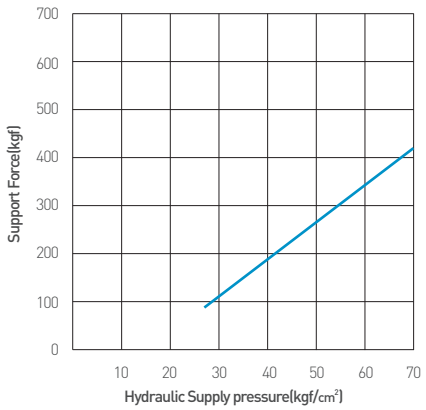

CWS-15081 & 15082

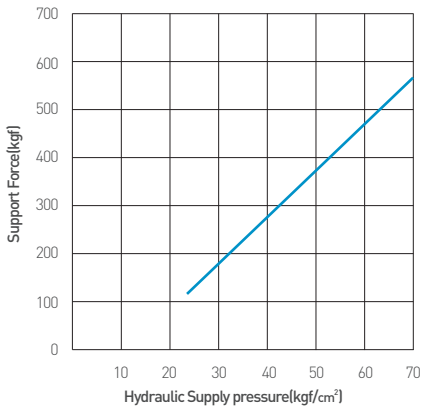

CWS-20122FG

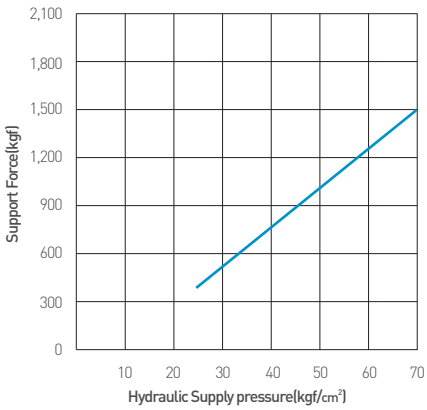

Circuit Diagram

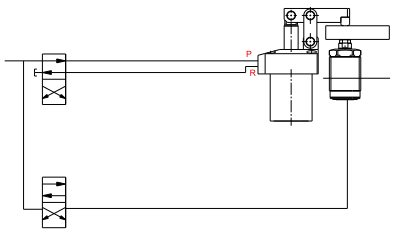

SOL Valve + Work Support

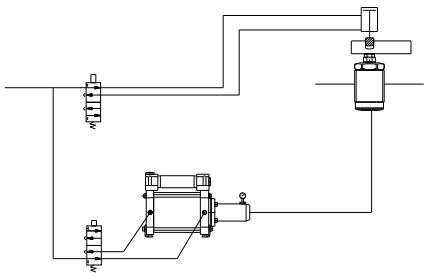

Booster + Work Support

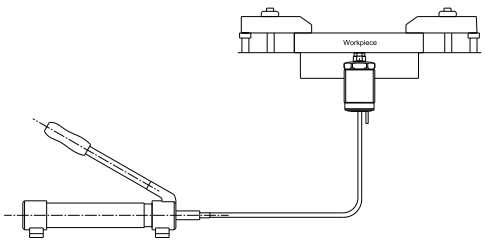

Hand Pump + Work Support

* 2단은 Flow Control Valve(P111) 사용 권장.
* Using Flow Control Vlave(P111) recommanded for Hydrulic Advance.

NEW

Low Pressure-Work Support Built-In Type

Features

1. 강력한 써포팅
2. 원활한 작동성
3. 1단 & 2단 작동방식
4. 사용압력 : 25~70kgf/cm²
5. 사용온도 : 0~70°C
6. 본체 권장체결토크
   CWS-12081/2 : 510 kgf·cm (50 N·m)
   CWS-15081/2 : 612 kgf·cm (60 N·m)
7. 과도한 힘으로 결합시 불량의 원인이 됨.

1. Strong supporting
2. Smooth operation
3. Spring/Hydraulic advance
4. Operating Pressure : 25~70kgf/cm²
5. Operating Temperature : 0~70°C
6. Recommened tightening torque for body
   CWS-12081/2 : 510 kgf·cm (50 N·m)
   CWS-15081/2 : 612 kgf·cm (60 N·m)
7. Assembly with excessive force will cause defact.

› CWS - 12 08 1
① ② ③

① Plunger Diameter(mm) ② Stroke(mm) ③ Operating Method

› CWS-12081
: 1단(Spring Advance)

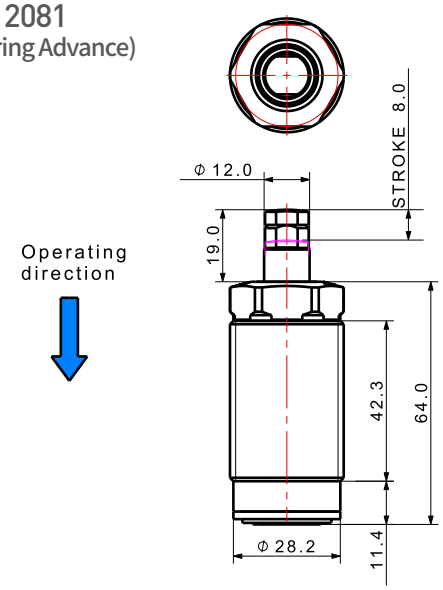

› CWS-12082
: 2단(Hydraulic Advance)

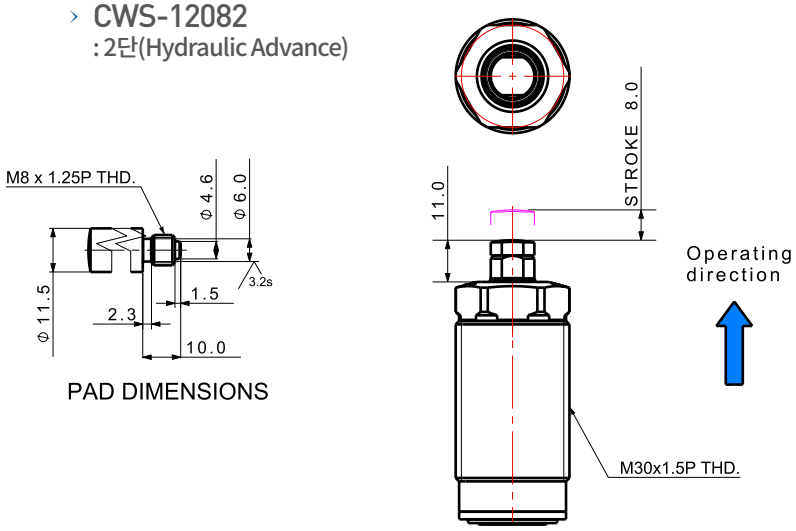

› CWS-15081
: 1단(Spring Advance)

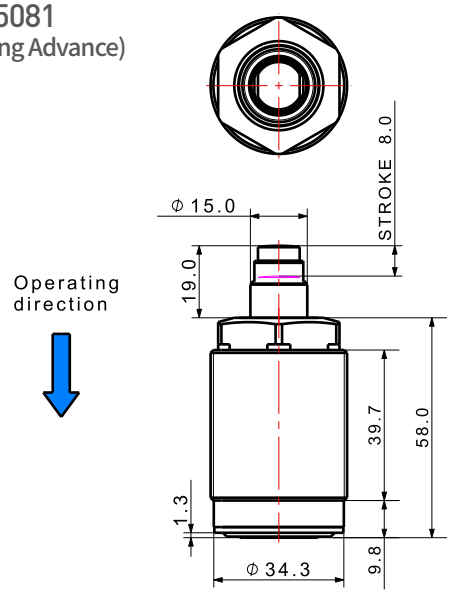

› CWS-15082
: 2단(Hydraulic Advance)

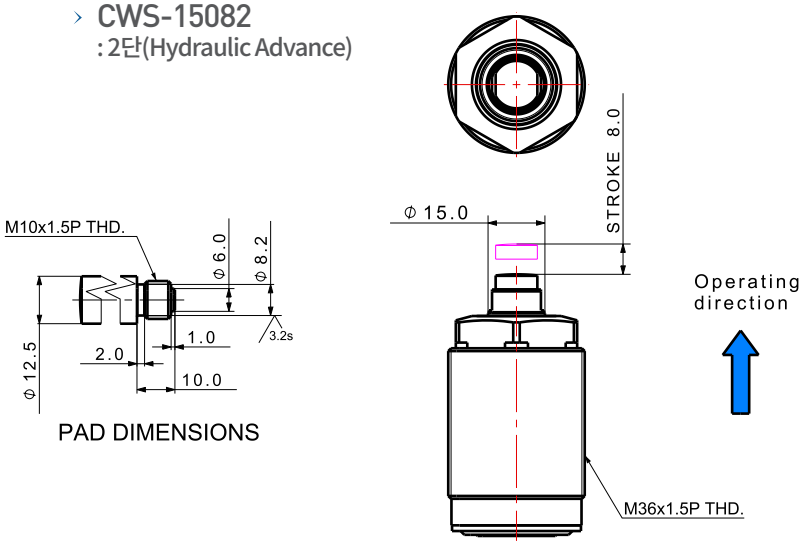

NEW

Low Pressure-Work Support Flange Type

Features

1. 강력한 써포팅
2. 원활한 작동성
3. 2단 작동방식
4. 사용압력 : 25~70kgf/cm²
5. 사용온도 : 0~70°C

1. Strong supporting
2. Smooth operation
3. Hydraulic advance
4. Operating Pressure : 25~70kgf/cm²
5. Operating Temperature : 0~70°C

› CWS - 20 12 2 FG
① ② ③ ④

① Plunger Diameter(mm) ② Stroke(mm) ③ Operating Method
④ Flange Gasket Type

› CWS-20122FG
: 2단(Hydraulic Advance)

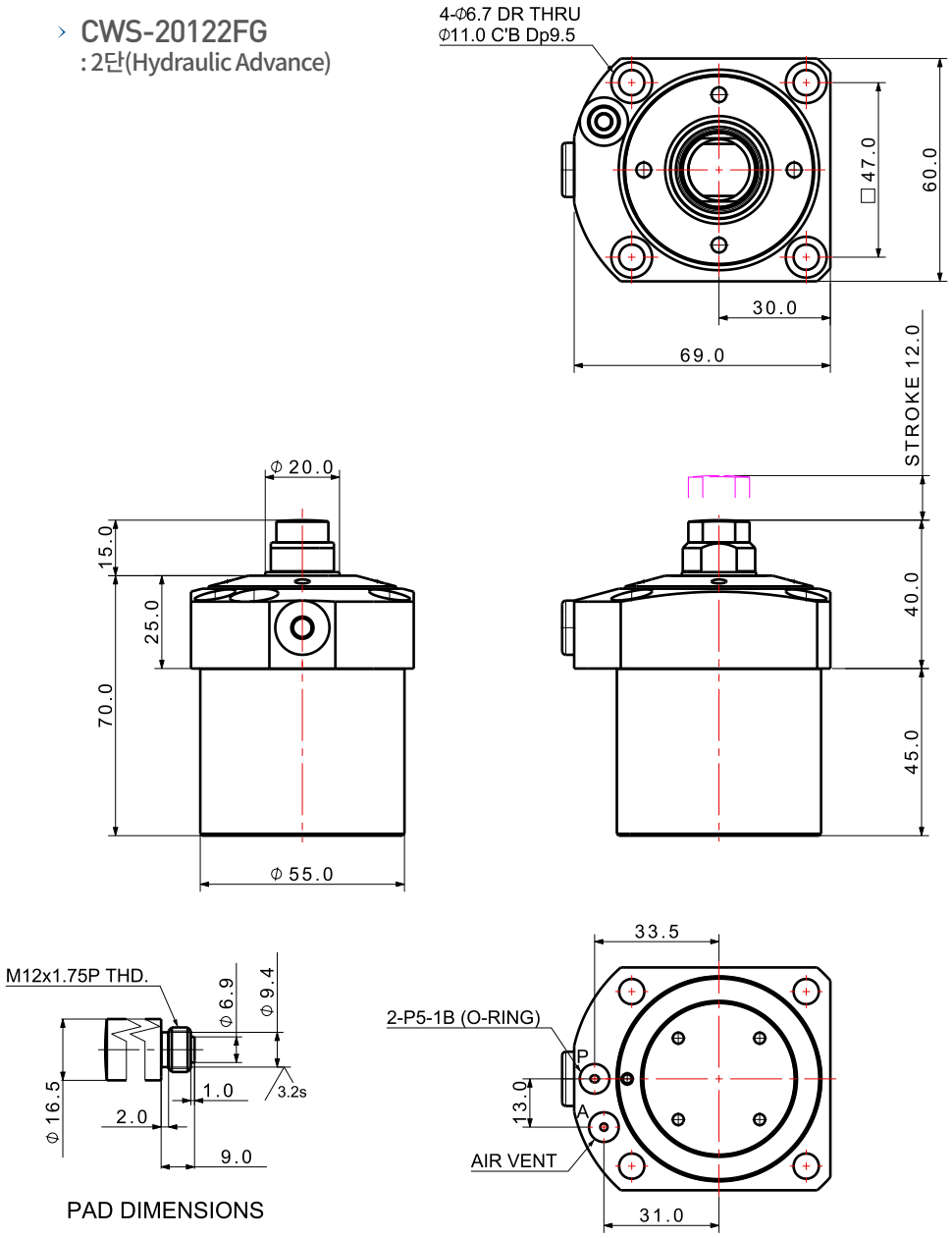

› CWD-4010

› CWD-4011

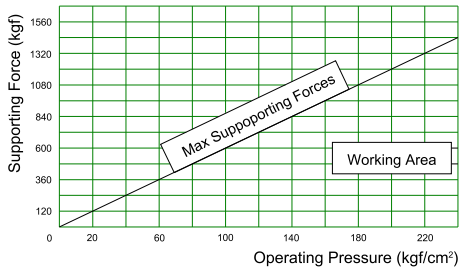

Work Support Block Type

Features

작동 : 스프링의 탄성에 의하여 워크써포트의 로드가 공작물의 면에 접촉된다. 다음 단계에서 오일 포트를 통하여 유압 작동유가 유입됨으로 슬리브가 작동되고, 이로 인해 워크써포트의 로드를 견고하게 잡아주며 공작물을 지지한다.

It is used for preventing vibration or slack of workpiece by cutting force. It is able to keep an accuracy of workpiece machining surface and reduces tool vibration. Thus, tool life could be extended.

Specifications

1. 작동압력 : 5~100kgf/cm²
2. 피스톤속도 : 8~100mm/s
3. 사용온도범위 : 0~60°C
4. Seal 재료 : 니트릴고무, 폴리우레탄

1. Operating Pressure : 5~100kgf/cm²
2. Piston Speed : 8~100mm/s
3. Operating Temperature : 0~60°C
4. Seal Material : Nitrile rubber, Polyurethane

› CWD-4010과 CWD-4011은 대칭으로 제작된 것이다.

› CWD-4010 and CWD-4011 are symmetry design.

› **CWD - 40 10**
CWD - 40 11
① Piston Diameter

Specification

MODEL NO.	Effective Area(cm²)		Oil Capacity(cm³)		Operating Pressure (kgf/cm²)	Weight (kg)	Spring Force(kgf)	Stroke (mm)
	Push	Pull	Push	Pull				
CWD-4010 CWD-4011	12.56	9.42	18.84	14.13	5~100	3.2	1.7	10

› CWD - 4010

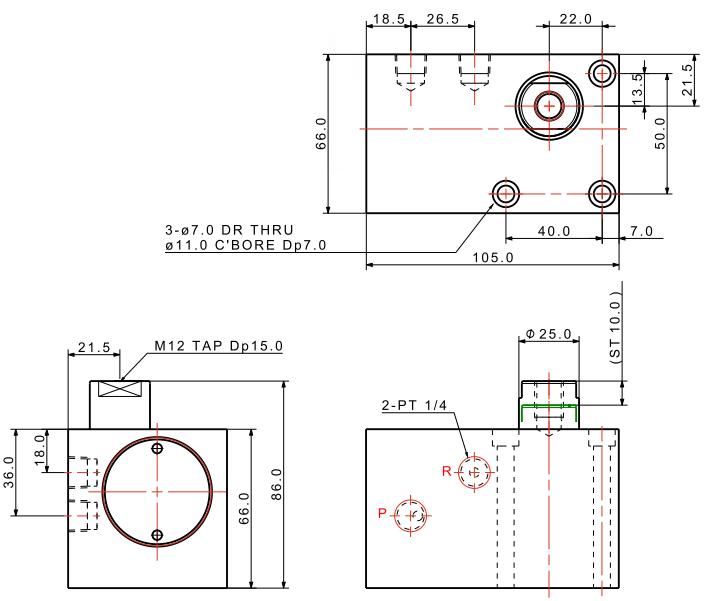

› CWD - 4011

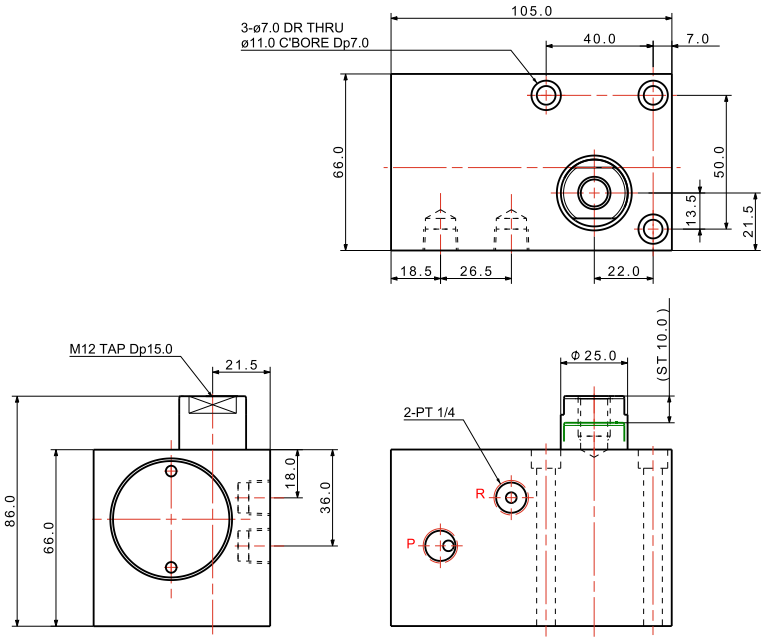

Work Support Bracket

› CWB-3045

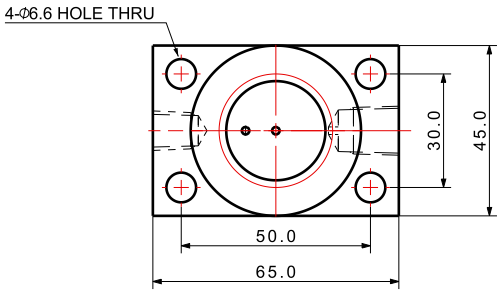

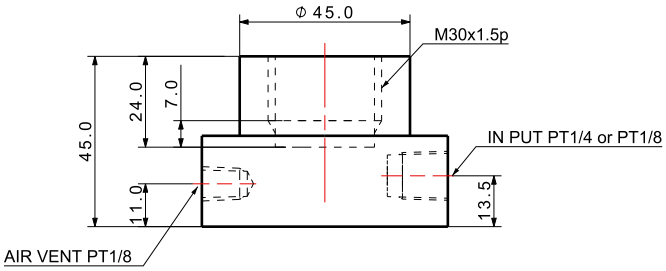

› CWB-3066

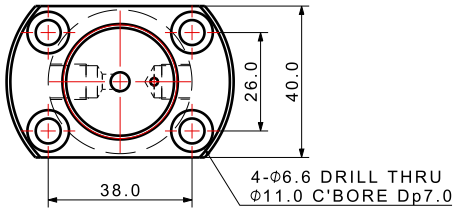

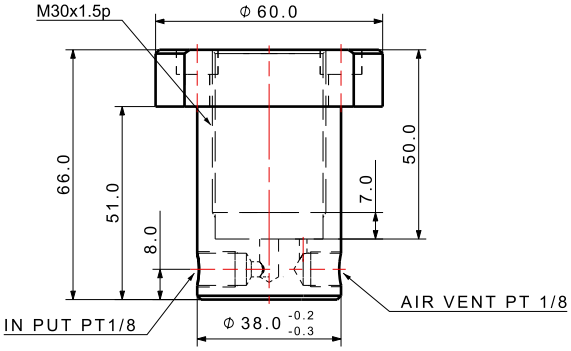

› CWB-3640

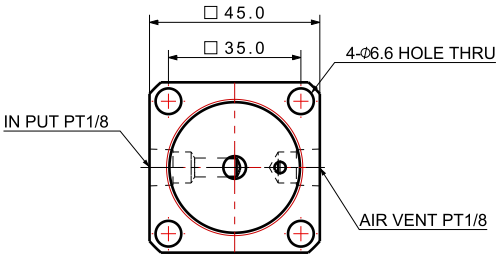

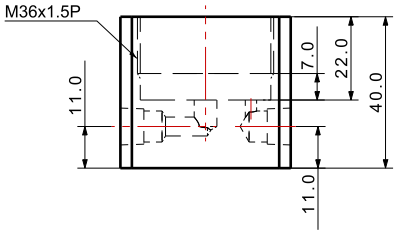

› CWB-3663

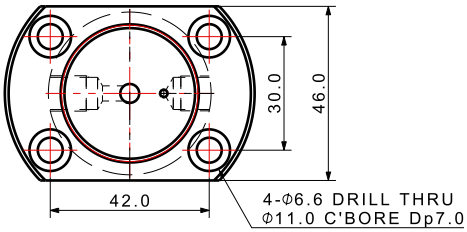

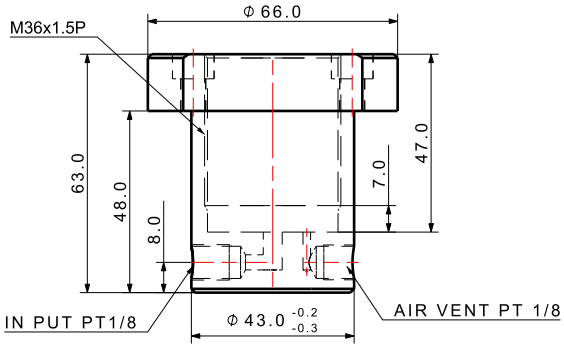

Hinge(Link) Clamp Applications

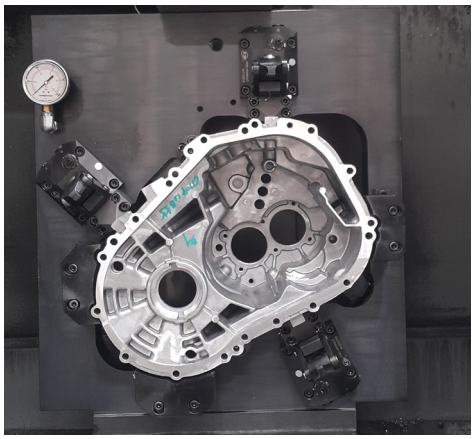

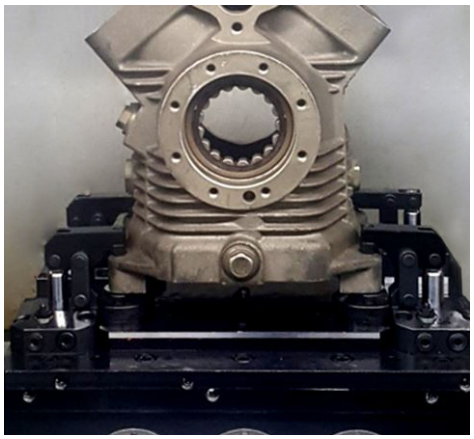

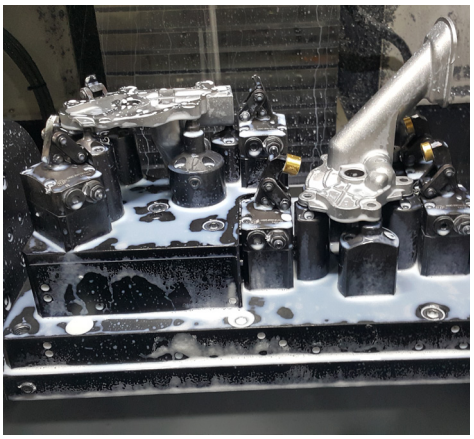

Hinge(Link) Clamp Types

NEW

Compact type

Gasket type

Standard type

Double Rod type

Tube type

Pneumatic type

Hinge(Link) Clamp Introduction

힌지 클램프는 링크와 핀을 활용해 디자인한 제품으로 공작물을 로딩 / 언로딩할 때 간섭이 없는
충분한 언클램프 각도와 컴팩트한 사이즈는 설계자의 설계 편의성을 최대로 고려한 디자인입니다.
힌지점과 몸체가 일체형으로 매우 견고한 구조이고 내구성도 우수합니다.
설치 상황에 가장 적합한 제품을 선정할 수 있도록 다양한 타입과 사이즈가 있습니다.

Hinge(Link) Clamp is a product designed using link and pin. Designed with sufficient unclamp angle and compact size, there is no interference when loading and unloading workpiece, which maximizes designer convenience. The body, integral with hinge point, provides very strong structure and durability. The products are available in various types and sizes to suit your installation environment.

Installation

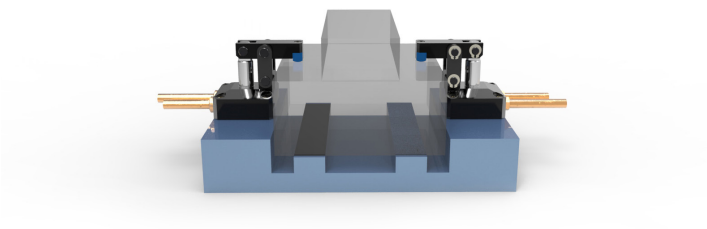

Lever Operation

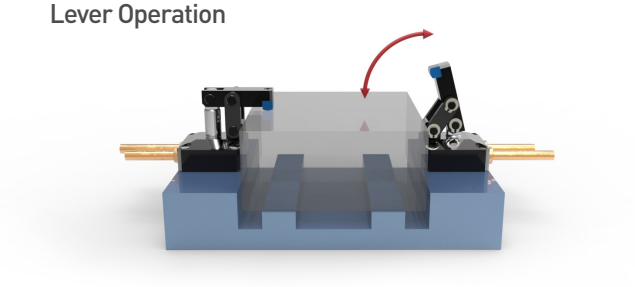

Structure

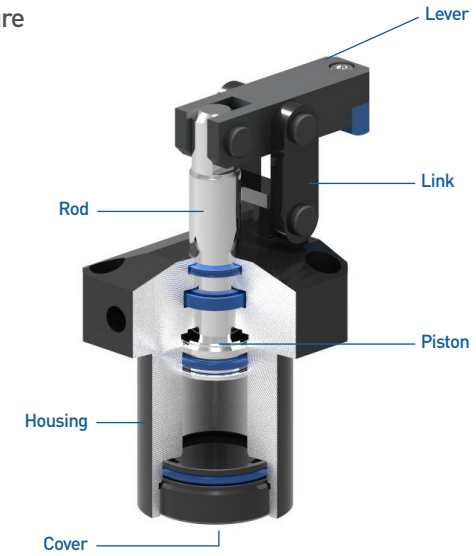

Caution on Lever

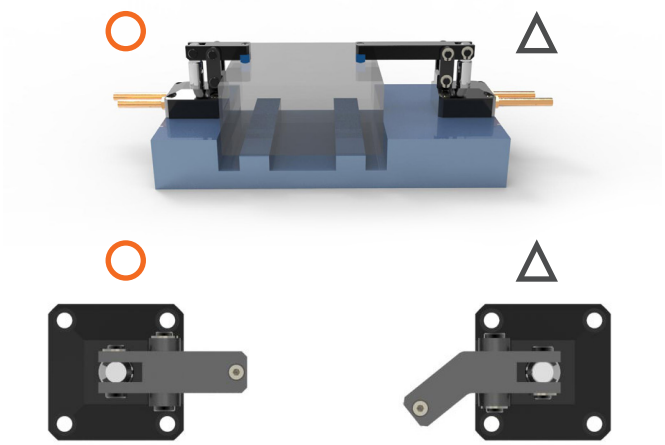

Hinge(Link) Clamp Compact Type (Low Pressure)

Compact type vs Gasket type

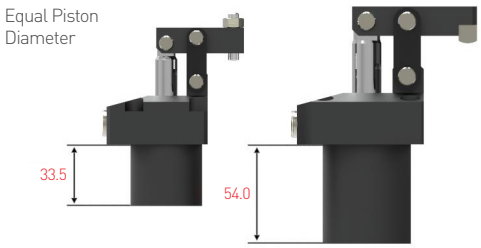

CHGC-2536G HGC-2502G

Manifold Method

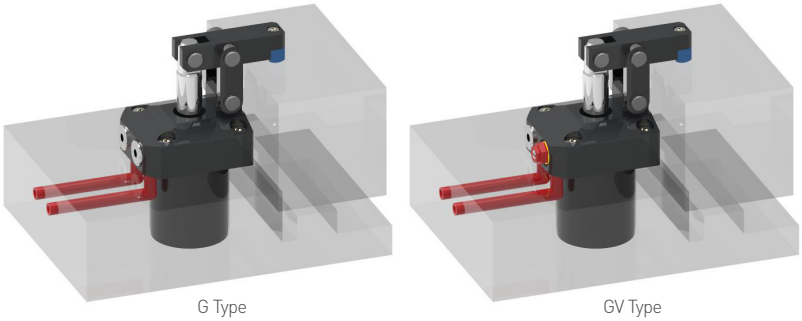

G Type GV Type

Model No.

CHGC-2036GV-RH

CHGC	–	20	36	GV	–	RH
1		2	3	4		5

1 Clamp Type
CHGC = COMPACT HINGE CLAMP

2 Piston Diameter
ex) 20 = ø20

3 Housing Diameter
ex) 36 = ø36

4 Type
- G = Gasket
- GV = Gasket + Flow control valve, Meter-in method

5 Lever Direction
- RH = Right Side
- LH = Left Side
- No sign = Front

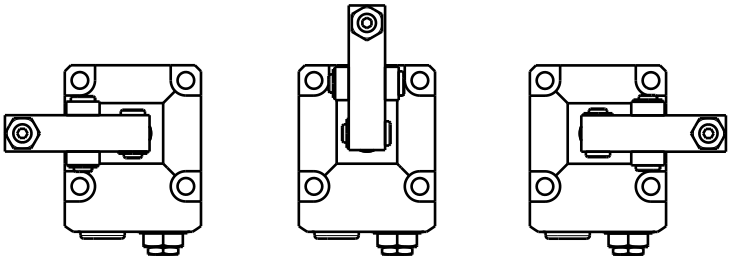

CHGC-xxxxGV-LH CHGC-xxxxGV CHGC-xxxxGV-RH

Specification

Compact Type

* 클램핑력은 표준치수 레버 적용 기준임.
* The clamping force in the table below relates to the standard dimension lever.

MODEL NO.		CHGC-2036 □		CHGC-2539 □		CHGC-3047 □		CHGC-3553 □		CHGC-4463 □		CHGC-5678 □		CHGC-70100 □	
Type	Gasket	G	GV	G	GV	G	GV	G	GV	G	GV	G	GV	G	GV
Clamping force(kgf)	@ 70 kgf/cm^2	167		280		390		490		810		1,350		2,020	
Piston Diameter (mm)		ø20		ø25		ø30		ø35		ø44		ø56		ø70	
Effective Area (cm^2)		3.14		4.91		7.07		9.62		15.2		24.62		38.47	
Stroke (mm)	Total	18.5		20.5		23.5		26		29.5		36		45	
	Extra	2.5		3		3		3		3		3		3	
Oil Capacity (cm^3)	Clamp(PUSH)	5.8		10.1		16.6		25.0		44.8		88.6		173.1	
	Unclamp(PULL)	4.3		7.7		13.0		21.0		38.9		74.4		145.4	
Operating Pressure Range		15 ~ 70 kgf/cm^2													
Operating Temperature Range		0 ~ 60℃													
Weight (kg)		0.66	0.67	0.78	0.79	1.08	1.09	1.51	1.52	2.64	2.65	4.46	4.47	8.63	8.64

Clamping Force Calculation Formula

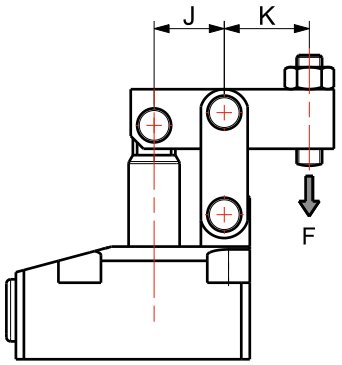

Hydraulic Clamp

클램핑력은 치수 K와 사용압력에 따라 변합니다.
아래의 계산식을 통해 클램핑력을 구해 주십시오.

Clamping force varies depending on dimension K and operating pressure.
Use below formula to calculate clamping force.

- F = Clamping Force(kgf)
- P = Hydraulic Pressure(kgf/cm^2)
- K = 옆의 도면 참조 Refer to Drawing (mm)

Note.
치수 K가 과도하게 짧을 경우, 최대 압력을 사용하면
클램프에 손상이 가거나 작동유가 새어 나올 수 있습니다.
Using excessively short dimension of K at maximum operating pressure may cause oil leakage and damage.

COMPACT

CHGC-2036G : F = 45.5 x P/K
CHGC-2539G : F = 80.9 x P/K
CHGC-3047G : F = 130.7 x P/K
CHGC-3553G : F = 201.9 x P/K
CHGC-4463G : F = 372.3 x P/K
CHGC-5678G : F = 750.8 x P/K
CHGC-70100G : F = 1,442.4 x P/K

Compact Hinge(Link) Clamp G Type

Features

1. 컴팩트한 사이즈
2. 설치와 배관 용이
3. 제품 장탈착 용이
4. 내경범위 : ø20~70
5. 작동압력 : 15~70kgf/cm²
6. 사용온도 : 0~60°C
7. 레버는 옵션

1. Compact size
2. Easy installation and manifold piping
3. Easy loading and removal of workpiece
4. Piston dia. : ø20~70
5. Operating Pressure : 15~70kgf/cm²
6. Operating Temperature : 0~60°C
7. Lever is option item

› CHGC - 20 36 G
① ② ③

① Piston Diameter(mm) ② Housing Diameter(mm) ③ Gasket Type

Manifold Method

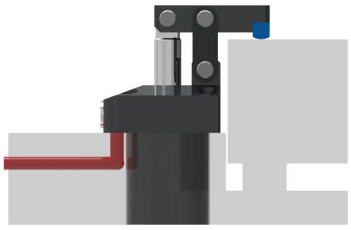

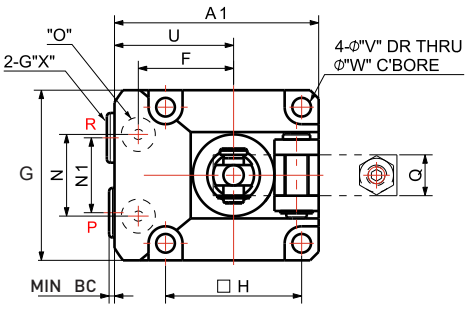

P : Clamp
R : Unclamp

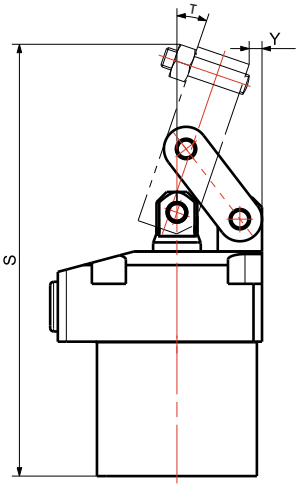

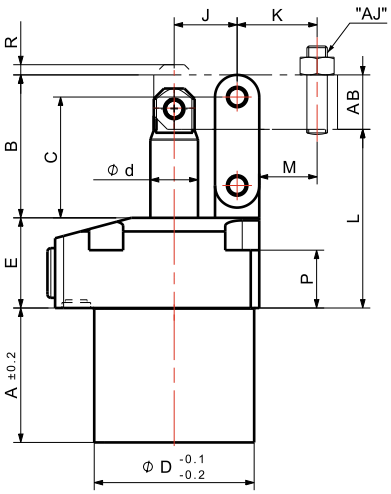

LEVER (OPTION)

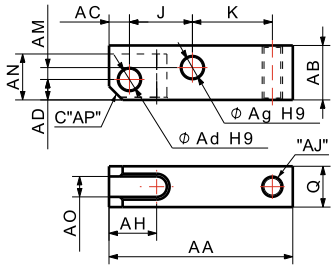

Dimensions

MODEL NO.		CHGC-2036G	CHGC-2539G	CHGC-3047G	CHGC-3553G	CHGC-4463G	CHGC-5678G	CHGC-70100G
DIMENSIONS (mm)	A	38.5	33.5	39.5	42.5	47	55	65
	A1	49	55.5	60	66	82	96	120
	B	30.5	37	42	48.5	57	71	87
	C	25	31.5	35.5	40.5	47.5	58.5	71
	øD	36	39	47	53	63	78	100
	ød	10	12	14	14	16	22.4	28
	E	25	26.5	26.5	28.5	36	40	47
	F	23.5	25	28	30.5	36	42	57
	G	40	45	50	57	70	86	108
	H	31.5	35	40	46	56	68	88
	J	14.5	16.5	18.5	21	24.5	30.5	37.5
	K	19	20	23.5	29	32	39	50
	L	43	49.5	52.5	57	68	80	96
	M	13.5	14	17	21.5	21.5	26.5	33.5
	N	16	22	24	28	36	45	50
	N1	16	20	22	26	30	38	50
	O	P5	P7	P7	P7	P8	P9	P10
	P	16	18	17	17	20	20	20
	Q	10	12	12	16	19	22	32
	R	2.5	3	3	3	3	3	3
	S	108.5	108.6	126.2	141.8	164.7	194.1	236.8
	T	19.6°	21.2°	18.9°	19.9°	20.5°	20.6°	18.4°
	U	29	32.5	35	37.5	47	53	66
	V	4.5	5.5	5.5	6.8	9	11	14
	W	8	10	10	12	15	18.5	20
	X	G1/8	G1/8	G1/8	G1/8	G1/4	G3/8	G3/8
	Y	2.9	2	3.8	3.2	4.3	6.2	9.8
	AA	43	48	54	64	73.5	90.5	115.5
	AB	12.5	14	16	20	25	31	38
	AC	4.5	5.5	6	6	7	10	13
	AD	4.5	5.5	6	6	8	9	12.5
	Ad	5	6	6	6	8	12	14
	Ag	5	6	6	8	10	14	16
	AH	10	11	14	13	17	21	28
	AJ	M5	M6	M6	M8	M10	M12	M16
	AM	2.5	3	3.5	6	7.5	9.5	9.5
	AN	10	12	13.5	13.5	18	23	29
	AO	5	6	6	8	10	11	16
	AP	C3.5	C3.0	C4.0	C4.0	C5.0	C7.0	C8.0
	BC	3.4	2.4	2.4	2.4	2.4	5.1	5.1

Compact Hinge(Link) Clamp GV Type

Features

1. 유량조절밸브 장착
2. 설치와 배관 용이
3. 제품 장탈착 용이
4. 내경범위 : ø20~70
5. 작동압력 : 15~70kgf/cm²
6. 사용온도 : 0~60°C
7. 레버는 옵션

1. Flow control valve mounted
2. Easy installation and manifold piping
3. Easy loading and removal of workpiece
4. Piston dia. : ø20~70
5. Operating Pressure : 15~70kgf/cm²
6. Operating Temperature : 0~60°C
7. Lever is option item

› CHGC - 20 36 GV
① ② ③

① Piston Diameter(mm) ② Housing Diameter(mm)
③ Gasket Side Valve Type

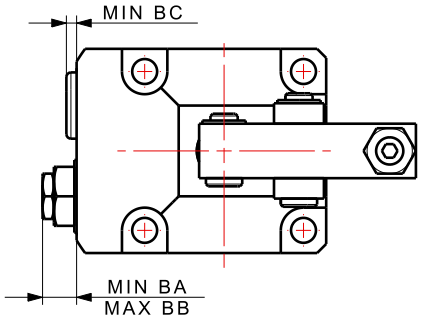

Dimensions

MODEL NO.		CHGC-2036GV	CHGC-2539GV	CHGC-3047GV	CHGC-3553GV	CHGC-4463GV	CHGC-5678GV	CHGC-70100GV
DIMENSIONS (mm)	BA	7.5	6.6	6.6	6.6	7.15	7.1	7.1
	BB	11.5	13.2	13.2	13.2	16.75	17.1	17.1
	BC	3.4	2.4	2.4	2.4	2.4	5.1	5.1

* G-RH/LH, GV-RH/LH type 주문가능.(레버 방향은 아래 그림 참조)
G-RH/LH and GV-RH/LH are available to be ordered.(Refer to below drawing)

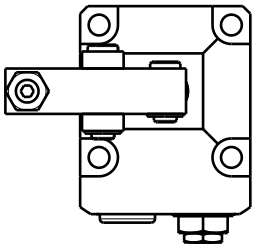

HGC-xxxxGV-LH

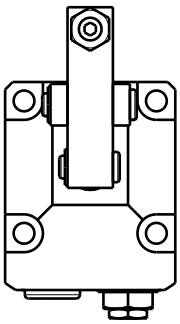

HGC-xxxxGV

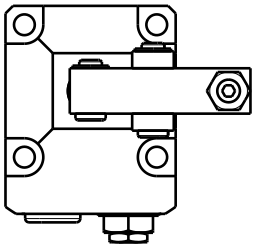

HGC-xxxxGV-RH

Hinge(Link) Clamp Gasket Type

Manifold Method

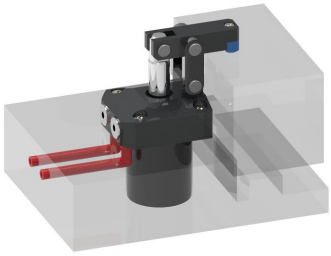

G Type

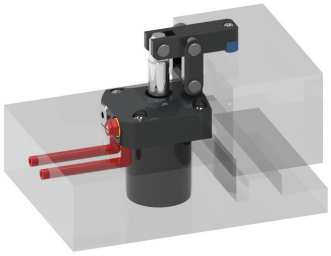

GV Type

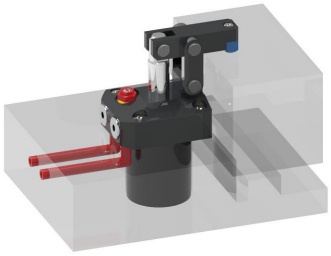

GVT Type

Model No.

HGC-2502GV-RH

HGC	–	25	02	GV	–	RH
1		2	3	4		5

1 Clamp Type
HGC = HINGE CLAMP

2 Piston Diameter
ex) 25 = ø25

3 Clamping Force
ex) 02 = 200kgf at 70kgf/cm^2

4 Type
- G = Gasket
- GV = Gasket + Flow control valve, Meter-in method
- GVT= Gasket + Flow control valve Top, Meter-out method

5 Lever Direction
- RH = Right Side
- LH = Left Side
- No sign = Front

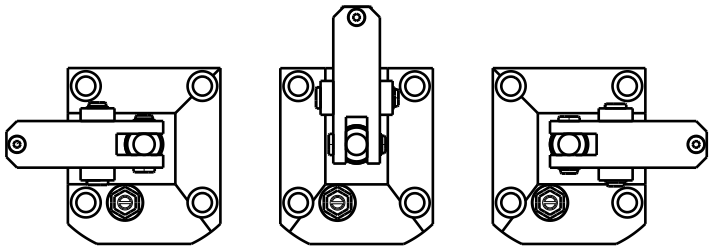

HGC-xxxxGVT-LH HGC-xxxxGVT HGC-xxxxGVT-RH

Specification

Gasket Type

* 클램핑력은 표준치수 레버적용 기준임.
* The Clamping force in the table below relates to the standard dimension lever.

MODEL NO.		HGC-2502 □			HGC-3203 □			HGC-4005 □			HGC-5009 □			HGC-6315 □			HGC-8023 □		
Type	Gaket	G	GV	GVT	G	GV	GVT	G	GV	GVT	G	GV	GVT	G	GV	GVT	G	GV	GVT
Clamping force (kgf)	@ 70 kgf/cm²	228			325			544			935			1,563			2,344		
	@ 150 kgf/cm²	490			698			1,166			2,004			3,351			5,023		
Piston Diameter (mm)		ø25			ø32			ø40			ø50			ø63			ø80		
Effective Area (cm²)		4.9			8.04			12.56			19.63			31.16			50.24		
Stroke (mm)	Total	28			28			33			42			50			60		
	Extra	2			2			2			4			4			4		
Oil Capacity (cm³)	Clamp(PUSH)	13.7			22.5			41.4			82.5			155.8			301.4		
	Unclamp(PULL)	8.1			15.4			25.2			52.8			106.3			206		
Operating Pressure Range		15~150kgf/cm²																	
Operating Temperature Range		0~60°C																	
Weight(kg)		1.73	1.73	1.72	2.26	2.27	2.27	3.37	3.38	3.39	5.67	5.68	5.68	9.06	9.07	9.07	15.28	15.29	15.28

Clamping Force Calculation Formula

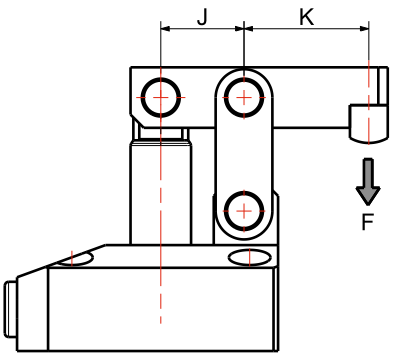

Hydraulic Clamp

클램핑력은 치수 K와 사용압력에 따라 변합니다.
아래의 계산식을 통해 클램핑력을 구해 주십시오.

Clamping force varies depending on dimension K and operating pressure.
Use below formula to calculate clamping force.

- F = Clamping Force(kgf)
- P = Hydraulic Pressure(kgf/cm²)
- K = 옆의 도면 참조 Refer to Drawing (mm)

Note.
치수 K가 과도하게 짧을 경우, 최대 압력을 사용하면 클램프에 손상이 가거나 작동유가 새어 나올 수 있습니다.
Using excessively short dimension of K at maximum operating pressure may cause oil leakage and damage.

STANDARD / GASKET / TUBE

HGC-2502□ : F = 107.8 x P / K
HGC-3203□ : F = 176.9 x P / K
HGC-4005□ : F = 326.6 x P / K
HGC-5009□ : F = 628.2 x P / K
HGC-6315□ : F = 1,184.1 x P / K
HGC-8023□ : F = 2,311.0 x P / K

Hinge(Link) Clamp G Type

Features

1. 매니폴더 배관이 용이
2. 빠른 클램핑 / 언클램핑 속도
3. 칩 배출 용이
4. 내경범위 : ø25~80
5. 작동압력 : 15~150kgf/cm²
6. 사용온도 : 0~60°C
7. 레버는 옵션

1. Easy manifold piping
2. Rapid clamping and unclamping
3. Easy removal of chips
4. Piston Diameter : ø25~80
5. Operating Pressure : 15~150kgf/cm²
6. Operating Temperature : 0~60°C
7. Lever is option item

› HGC - 25 02 G
① ② ③

① Piston Diameter(mm) ② Clamping Force at 70kgf/cm² ③ Gasket Type

Manifold Method

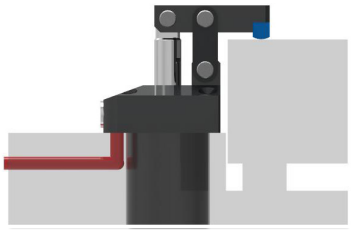

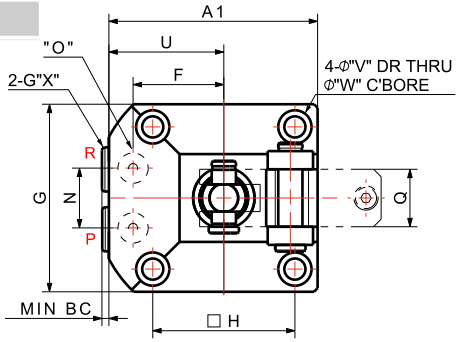

P : Clamp
R : Unclamp

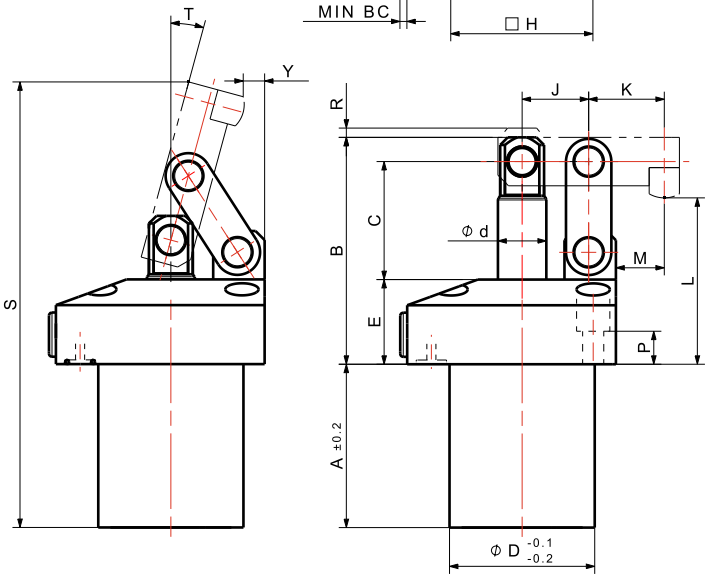

LEVER (OPTION)

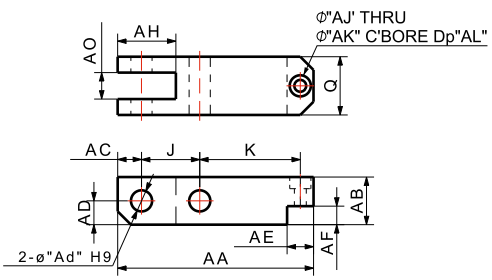

PAD (OPTION)

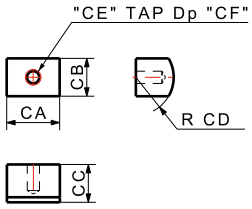

Dimensions

MODEL NO.		HGC-2502G	HGC-3203G	HGC-4005G	HGC-5009G	HGC-6315G	HGC-8023G
DIMENSIONS (mm)	A	54	54	60	78	89	100
	A1	69	83	92	104	121	148.5
	B	75	80	90	108	127	158
	C	39	42.5	47.5	57.5	71	86
	øD	48	55	65	80	95	115
	ød	16	18	25	30	35.5	45
	E	28	27.5	29.5	34.5	36	48
	F	30	35	40	48	55	70
	G	62	72	80	88	108	125
	H	47	55	63	70	85	100
	J	22	22	26	32	38	46
	K	33	38	42	47	53	69
	L	55	58	63	76	85	108
	M	24	24	28	35	37	52.5
	N	24	26	31	33	39	46
	O	P7	P10	P10	P10	P10	P10
	P	14	13.5	15	17.5	16	23
	Q	19	22	25	32	40	44
	R	2	2	2	4	4	4
	S	155	163	180	220	252	306
	T	15.2°	13.0°	14.3°	14.3°	14.0°	13.7°
	U	38	47	52	60	67	86
	V	7	9	9	9	11	14
	W	11	14	14	14	17.5	20
	X	G1/8	G1/8	G1/4	G3/8	G3/8	G3/8
	Y	4.6	10.5	9.4	8.5	10	9.1
	AA	68	74	85	100	118	147
	AB	16	18	22	26	34	40
	AC	8	9	11	13	17	20
	AD	8	9	11	13	17	20
	Ad	8	8	10	12	16	18
	AE	10	10	12	16	20	24
	AF	6	7	9	10	13	16
	AH	20	22	26	32	40	46
	AJ	4.5	4.5	6	6.6	9	11
	AK	8	8	9.5	11	14	17.5
	AL	4.4	4.4	6	7	8.6	11
	AO	9	10	12	16	20	24
	BC	3.4	3.4	3.4	3.4	3.4	6
	CA	14	14	16	20	25	28
	CB	10	10	12	16	20	24
	CC	10	10	12	13	18	22
	CD	10	10	10	15	20	25
	CE	M4	M4	M5	M6	M8	M10
	CF	6	6	6	7	9	12

Hinge(Link) Clamp GV / GVT Type

Features

1. 매니폴더 배관 용이
2. 유량조절밸브 장착형
3. 유량조절밸브 위치 선택가능
4. 내경범위 : ø25~80
5. 작동압력 : 15~150kgf/cm²
6. 사용온도 : 0~60°C
7. 레버는 옵션

1. Easy manifold piping
2. Flow control valve mounted
3. 2-position flow control valve
4. Piston Diameter : ø25~80
5. Operating Pressure : 15~150kgf/cm²
6. Operating Temperature : 0~60°C
7. Lever is option item

› HGC - 25 02 GV
① ② ③

① Piston Diameter
② Clamping Force at 70kgf/cm²
③ Gasket Side Valve Type

HGC - 25 02 GVT
① ② ③

① Piston Diameter
② Clamping Force at 70kgf/cm²
③ Gasket Top Valve Type

GV Type

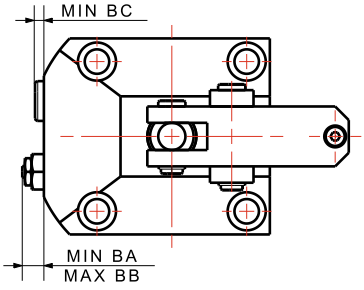

Meter-In

Dimensions

MODEL NO.		HGC-2502GV	HGC-3203GV	HGC-4005GV	HGC-5009GV	HGC-6315GV	HGC-8023GV
DIMENSIONS (mm)	BA	7	7	10.5	10.5	10.5	10.5
	BB	11	11	14.5	14.5	14.5	14.5
	BC	3.4	3.4	3.4	3.4	3.4	6

GVT Type

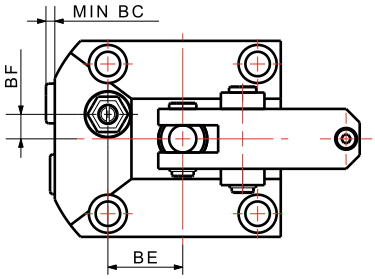

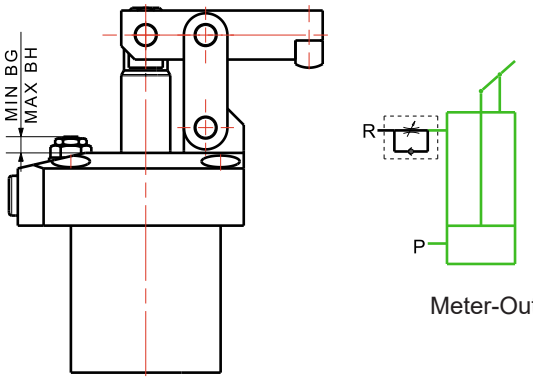

Meter-Out

Dimensions

MODEL NO.		HGC-2502GVT	HGC-3203GVT	HGC-4005GVT	HGC-5009GVT	HGC-6315GVT	HGC-8023GVT
DIMENSIONS (mm)	BE	22	27.5	31.5	35	42	46
	BF	8	9	11	15	19.5	23
	BG	2.5	4.5	9	6	6	5
	BH	6.5	8.5	13	10	10	9

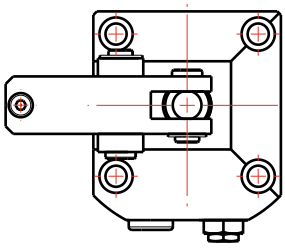

HGC-xxxxGV-LH

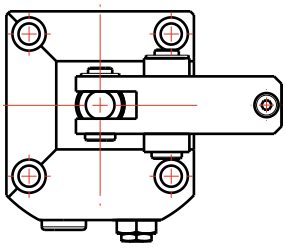

HGC-xxxxGV-RH

* G-RH/LH, GV-RH/LH type 주문가능.
(레버 방향은 위의 그림 참조)
G-RH/LH and GV-RH/LH are available to be ordered.
(Refer to above drawing)

Hinge(Link) Clamp Nipple Type

Piping Method

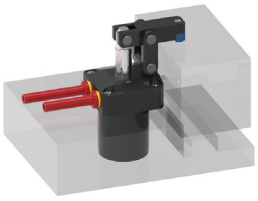
Standard type

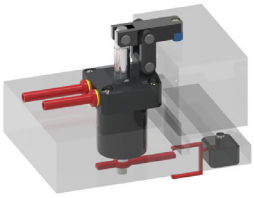
Double Rod type

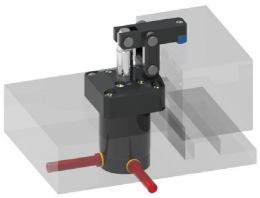
T type

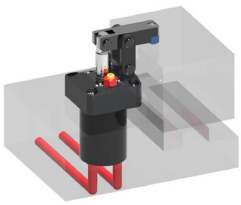
TV type

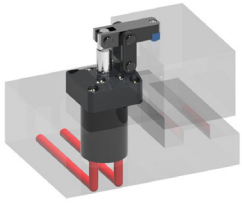
TS type

Model No.

HGC-2502T

HGC	–	25	02	T
1		2	3	4

1 Clamp Type
HGC = HINGE CLAMP

2 Piston Diameter
ex) 25 = ø25

3 Clamping Force
ex) 02 = 200kgf at 70kgf/cm²

4 Type
- No Sign = Standard
- T = Tube
- TV = Tube+Flow control vavle
- TS = Tube under bottom
- D = Double Rod

Specification

Standard / Tube Type

* 클램핑력은 표준치수 레버적용 기준임.
* The clamping force in the table below relates to the standard dimension lever.

MODEL NO.		HGC-2502 □			HGC-3203 □			HGC-4005 □			HGC-5009 □			HGC-6315 □			HGC-8023 □		
Type	Standrad	No sign			No sign			No sign			No sign			No sign			No sign		
	Tube	T	TV	TS	T	TV	TS	T	TV	TS	T	TV	TS	T	TV	TS	T	TV	TS
Clamping force (kgf)	@ 70 kgf/cm^2	228			325			544			935			1,563			2,344		
	@ 150 kgf/cm^2	490			698			1,166			2,004			3,351			5,023		
Piston Diameter (mm)		ø25			ø32			ø40			ø50			ø63			ø80		
Effective Area (cm^2)		4.9			8.04			12.56			19.63			31.16			50.24		
Stroke (mm)	Total	28			28			33			42			50			60		
	Extra	2			2			2			4			4			4		
Oil Capacity (cm^3)	Clamp(PUSH)	13.7			22.5			41.4			82.5			155.8			301.4		
	Unclamp(PULL)	8.1			15.4			25.2			52.8			106.3			206		
Operating Pressure Range		15 ~ 70 kgf/cm^2 (Standard type : 15~150kgf/cm^2)																	
Operating Temperature Range		0~60°C																	
Weight (kg)	Standard	1.48			1.90			2.80			4.77			7.65			12.73		
	Tube	1.73	1.73	1.72	2.26	2.27	2.27	3.37	3.38	3.39	5.67	5.68	5.68	9.06	9.07	9.07	15.28	15.29	15.28

Double Rod Type

* 클램핑력은 표준치수 레버적용 기준임.
* The clamping force in the table below relates to the standard dimension lever.

MODEL NO.		HGC-2502 D	HGC-3203 D	HGC-4005 D	HGC-5009 D	HGC-6315 D	HGC-8023 D
Clamping force (kgf)	@ 70 kgf/cm^2	157	244	457	785	1,406	2,198
	@ 150 kgf/cm^2	336	523	979	1,683	3,013	4,710
Piston Diameter (mm)		ø25	ø32	ø40	ø50	ø63	ø80
Effective area (cm^2)		3.37	6.03	10.55	16.49	28.02	47.1
Stroke (mm)	Total	28	28	33	42	50	60
	Extra	2	2	2	4	4	4
Oil Capacity (cm^3)	Clamp(PUSH)	9.4	16.8	34.8	69.2	140	282.6
	Unclamp(PULL)	8.1	15.3	25.2	52.7	106.3	206
Operating Pressure Range		15 ~ 150 kgf/cm^2					
Operating Temperature Range		0 ~ 60°C					
Weight (kg)		1.63	2.16	3.1	5.33	8.66	14.35

Clamping Force Calculation Formula

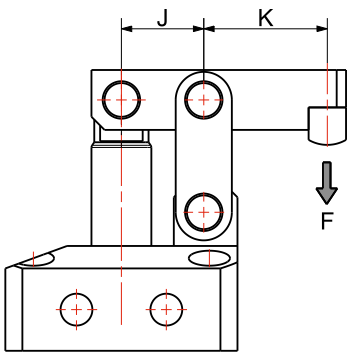

Hydraulic Clamp

클램핑력은 치수 K와 사용압력에 따라 변합니다.
아래의 계산식을 통해 클램핑력을 구해 주십시오.

Clamping force varies depending on dimension K and operating pressure.
Use below formula to calculate clamping force.

- F = Clamping Force(kgf)
- P = Hydraulic Pressure(kgf/cm^2)
- K = 옆의 도면 참조 Refer to Drawing (mm)

Note.
치수 K가 과도하게 짧을 경우, 최대 압력을 사용하면 클램프에 손상이 가거나 작동유가 새어 나올 수 있습니다.
Using excessively short dimension of K at maximum operating pressure may cause oil leakage and damage.

STANDARD / GASKET / TUBE

HGC-2502□ : F = 107.8 x P / K
HGC-3203□ : F = 176.9 x P / K
HGC-4005□ : F = 326.6 x P / K
HGC-5009□ : F = 628.2 x P / K
HGC-6315□ : F = 1,184.1 x P / K
HGC-8023□ : F = 2,311.0 x P / K

DOUBLE RODS

HGC-2502D : F = 73.9 x P / K
HGC-3203D : F = 132.6 x P / K
HGC-4005D : F = 274.3 x P / K
HGC-5009D : F = 527.7 x P / K
HGC-6315D : F = 1,064.8 x P / K
HGC-8023D : F = 2,166.6 x P / K

Hinge(Link) Clamp Standard Type

Features

1. 세방향 배관 포트
2. 쉬운 설치와 배관
3. 편리한 제품 장탈착
4. 내경범위 : ø25~80
5. 작동압력 : 15~150kgf/cm²
6. 사용온도 : 0~60°C
7. 레버는 옵션

1. 3-direction piping port
2. Easy installation and piping
3. Easy loading and removal of workpiece
4. Piston Diameter : ø25~80
5. Operating Pressure : 15~150kgf/cm²
6. Operating Temperature : 0~60°C
7. Lever is option item

› HGC - 25 02
① ②

① Piston Diameter ② Clamping Force at 70kgf/cm²

Piping Method

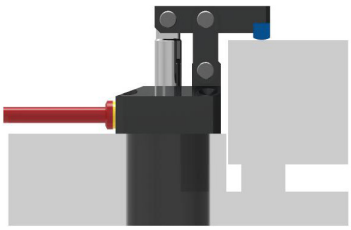

P : Clamp
R : Unclamp

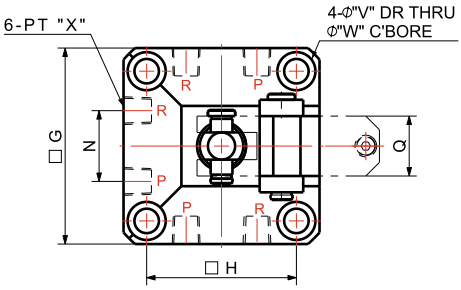

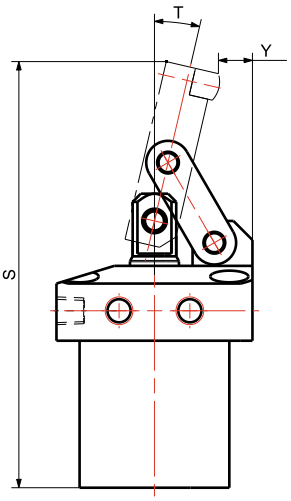

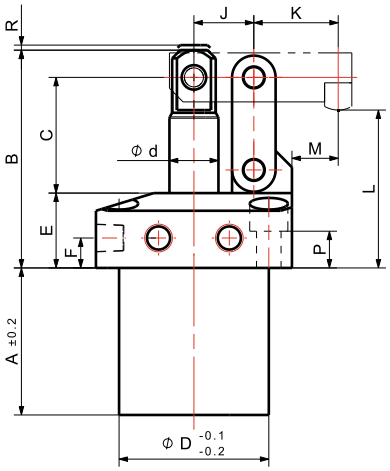

LEVER (OPTION)

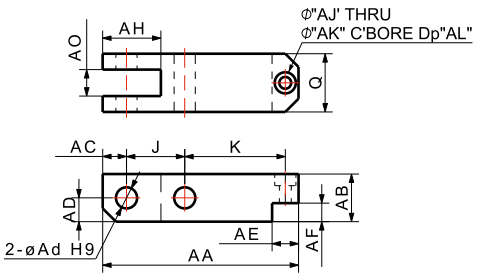

PAD (OPTION)

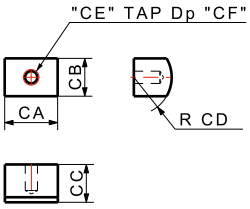

Dimensions

	MODEL NO.	HGC-2502	HGC-3203	HGC-4005	HGC-5009	HGC-6315	HGC-8023
DIMENSIONS (mm)	A	54	54	60	78	89	100
	B	75	80	90	108	127	158
	C	39	42.5	47.5	57.5	71	86
	øD	48	55	65	80	95	115
	ød	16	18	25	30	35.5	45
	E	28	27.5	29.5	34.5	36	48
	F	11	11	12	14	14	22.5
	G	62	72	80	88	108	125
	H	47	55	63	70	85	100
	J	22	22	26	32	38	46
	K	33	38	42	47	53	69
	L	55	58	63	76	85	108
	M	24	24	28	35	37	52.5
	N	24	26	31	33	39	46
	P	14	13.5	15	17.5	16	23
	Q	19	22	25	32	40	44
	R	2	2	2	4	4	4
	S	155	163	180	220	252	306
	T	15.2°	13.0°	14.3°	14.3°	14.0°	13.7°
	V	7	9	9	9	11	14
	W	11	14	14	14	17.5	20
	X	1/8	1/8	1/4	1/4	3/8	3/8
	Y	4.6	10.5	9.4	8.5	10	9.2
	AA	68	74	85	100	118	147
	AB	16	18	22	26	34	40
	AC	8	9	11	13	17	20
	AD	8	9	11	13	17	20
	Ad	8	8	10	12	16	18
	AE	10	10	12	16	20	24
	AF	6	7	9	10	13	16
	AH	20	22	26	32	40	46
	AJ	4.5	4.5	6	6.6	9	11
	AK	8	8	9.5	11	14	17.5
	AL	4.4	4.4	6	7	8.6	11
	AO	9	10	12	16	20	24
	CA	14	14	16	20	25	28
	CB	10	10	12	16	20	24
	CC	10	10	12	13	18	24
	CD	10	10	10	15	20	25
	CE	M4	M4	M5	M6	M8	M10
	CF	6	6	6	7	9	12

Hinge(Link) Clamp Double Rod Type

Features

1. 리미트 센서 시스템에 적용
2. 쉬운 설치와 배관
3. 편리한 제품 장탈착
4. 내경범위 : ø25~80
5. 작동압력 : 15~150kgf/cm²
6. 사용온도 : 0~60°C
7. 레버는 옵션

1. Applicable to limit sensor system
2. Easy installation and piping
3. Easy loading and removal of workpiece
4. Piston Diameter : ø25~80
5. Operating Pressure : 15~150kgf/cm²
6. Operating Temperature : 0~60°C
7. Lever is option item

› HGC - 25 02 D
① ② ③

① Piston Diameter(mm) ② Clamping Force at 70kgf/cm² ③ Double Rod Type

Piping Method

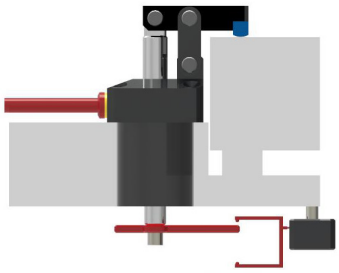

P : Clamp
R : Unclamp

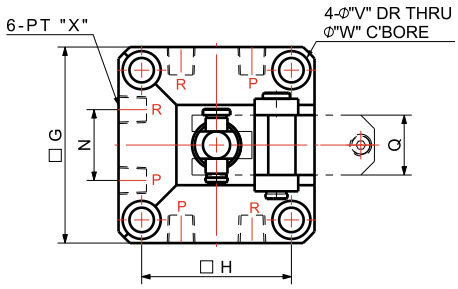

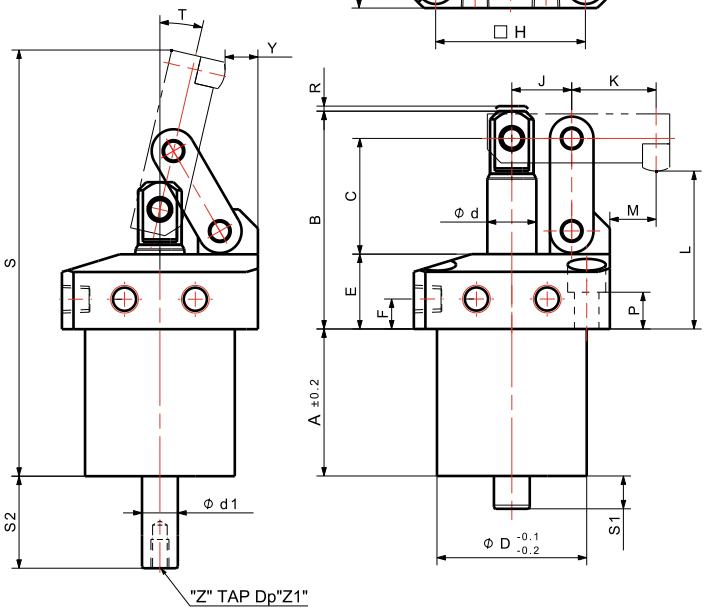

LEVER (OPTION)

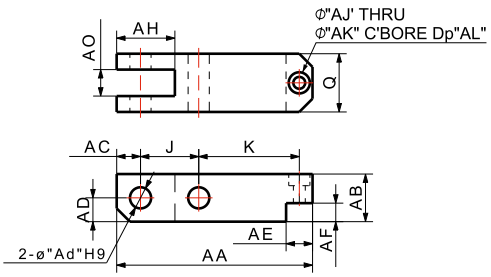

PAD (OPTION)

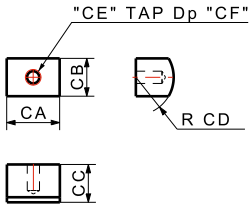

Dimensions

	MODEL NO.	HGC-2502D	HGC-3203D	HGC-4005D	HGC-5009D	HGC-6315D	HGC-8023D
DIMENSIONS (mm)	A	54	57	60	78	89	100
	B	75	80	90	108	127	158
	C	39	42.5	47.5	57.5	71	86
	øD	48	55	65	80	95	115
	ød	16	18	25	30	35.5	45
	ød1	14	16	16	20	20	20
	E	28	27.5	29.5	34.5	36	48
	F	11	11	12	14	14	22.5
	G	62	72	80	88	108	125
	H	47	55	63	70	85	100
	J	22	22	26	32	38	46
	K	33	38	42	47	53	69
	L	55	58	63	76	85	108
	M	24	24	28	35	37	52.5
	N	24	26	31	33	39	46
	P	14	13.5	15.5	17.5	16	23
	Q	19	22	25	32	40	44
	R	2	2	2	4	4	4
	S	155	166.4	180.4	220	252	306
	S1	12	12	12	14	14	14
	S2	38	38	43	52	60	70
	T	15.2°	13.1°	14.3°	14.3°	14.0°	13.7°
	V	7	9	9	9	11	14
	W	11	14	14	14	17.5	20
	X	1/8	1/8	1/4	1/4	3/8	3/8
	Y	4.6	10.5	9.4	8.5	10	9.2
	Z	M8	M8	M8	M12	M12	M12
	Z1	12	15	15	20	20	20
	AA	68	74	85	100	118	147
	AB	16	18	22	26	34	40
	AC	8	9	11	13	17	20
	AD	8	9	11	13	17	20
	Ad	8	8	10	12	16	18
	AE	10	10	12	16	20	24
	AF	6	7	9	10	13	16
	AH	20	22	26	32	40	46
	AJ	4.5	4.5	6	6.6	9	11
	AK	8	8	9.5	11	14	17.5
	AL	4.4	4.4	6	7	8.6	11
	AO	9	10	12	16	20	24
	CA	14	14	16	20	25	28
	CB	10	10	12	16	20	24
	CC	10	10	12	13	18	24
	CD	10	10	10	15	20	25
	CE	M4	M4	M5	M6	M8	M10
	CF	6	6	6	7	9	12

Hinge(Link) Clamp T Type

Features

1. 하우징 하부 배관
2. 쉬운 설치와 배관
3. 편리한 제품 장탈착
4. 내경범위 : ø25~80
5. 작동압력 : 15~70kgf/cm²
6. 사용온도 : 0~60°C
7. 레버는 옵션

1. Piping on lower position of housing
2. Easy installation and piping
3. Easy loading and removal of workpiece
4. Piston Diameter : ø25~80
5. Operating Pressure : 15~70kgf/cm²
6. Operating Temperature : 0~60°C
7. Lever is option item

› HGC - 25 02 T
① ② ③

① Piston Diameter(mm) ② Clamping Force at 70kgf/cm² ③ Tube Type

Piping Method

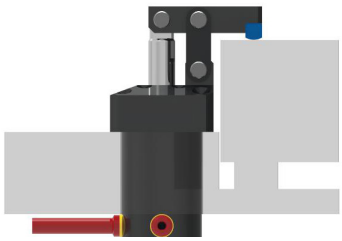

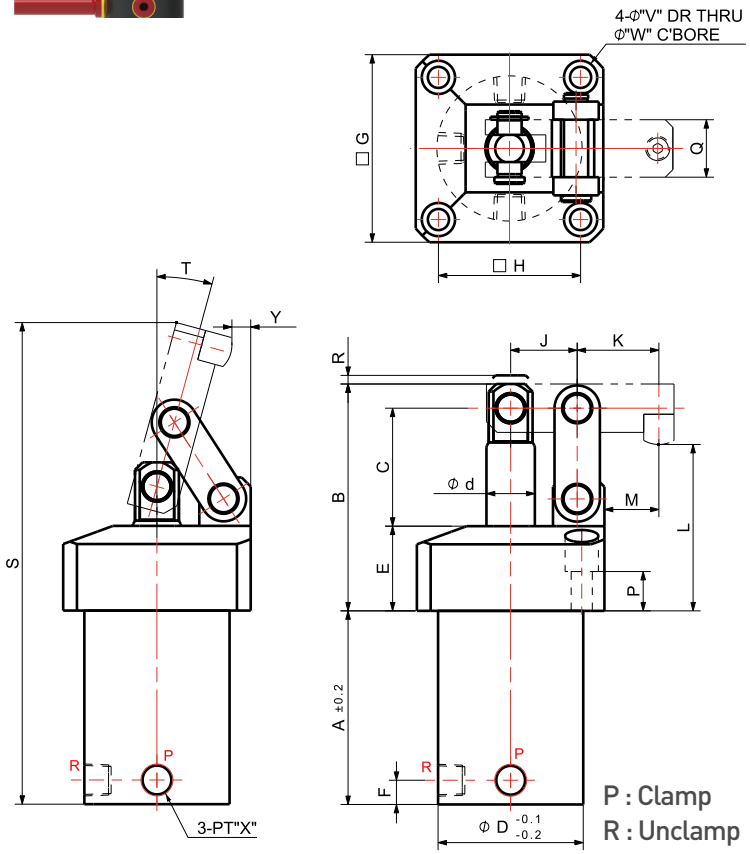

LEVER (OPTION)

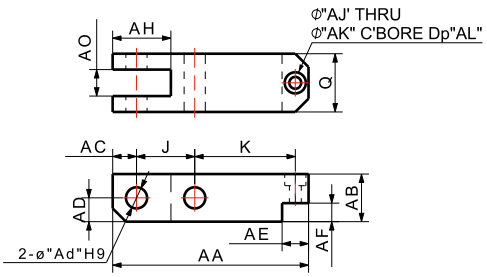

PAD (OPTION)

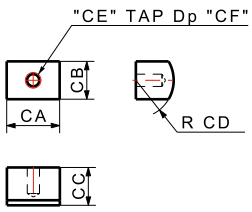

Dimensions

MODEL NO.		HGC-2502T	HGC-3203T	HGC-4005T	HGC-5009T	HGC-6315T	HGC-8023T
DIMENSIONS (mm)	A	64	64	79	94	111	123
	B	75	80	90	108	127	158
	C	39	42.5	47.5	57.5	71	86
	øD	48	55	65	80	95	115
	ød	16	18	25	30	35.5	45
	E	28	27.5	29.5	34.5	36	48
	F	8	8	11	12	14	15.5
	G	62	72	80	88	108	125
	H	47	55	63	70	85	100
	J	22	22	26	32	38	46
	K	33	38	42	47	53	69
	L	55	58	63	76	85	108
	M	24	24	28	35	37	52.5
	P	14	13.5	15	17.5	16	23
	Q	19	22	25	32	40	44
	R	2	2	2	4	4	4
	S	155	163	180.4	220	252	306
	T	15.2°	13.0°	14.3°	14.3°	14.0°	13.7°
	V	7	9	9	9	11	14
	W	11	14	14	14	17.5	20
	X	1/8	1/8	1/4	1/4	3/8	3/8
	Y	4.6	10.5	9.4	8.5	10	9.2
	AA	68	74	85	100	118	147
	AB	16	18	22	26	34	40
	AC	8	9	11	13	17	20
	AD	8	9	11	13	17	20
	Ad	8	8	10	12	16	18
	AE	10	10	12	16	20	24
	AF	6	7	9	10	13	16
	AH	20	22	26	32	40	46
	AJ	4.5	4.5	6	6.6	9	11
	AK	8	8	9.5	11	14	17.5
	AL	4.4	4.4	6	7	8.6	11
	AO	9	10	12	16	20	24
	CA	14	14	16	20	25	28
	CB	10	10	12	16	20	24
	CC	10	10	12	13	18	22
	CD	10	10	10	15	20	25
	CE	M4	M4	M5	M6	M8	M10
	CF	6	6	6	7	9	12

Hinge(Link) Clamp TV/TS Type

Features

1. 하우징 밑면 배관
2. 플랜지 상면 밸브 장착(TV)
3. 편리한 제품 장탈착
4. 내경범위 : ø25~40
5. 작동압력 : 15~70kgf/cm²
6. 사용온도 : 0~60°C
7. 레버는 옵션

1. Piping on lower position of housing
2. Valve located on the top of flange
3. Easy loading and removal of workpiece
4. Piston Diameter : ø25~40
5. Operating Pressure : 15~70kgf/cm²
6. Operating Temperature : 0~60°C
7. Lever is option item

› HGC - 25 02 TV
① ② ③

① Piston Diameter(mm)
② Clamping Force at 70kgf/cm²
③ Bottom Tube + Valve Type

HGC - 25 02 TS
① ② ③

① Piston Diameter(mm)
② Clamping Force at 70kgf/cm²
③ Bottom Tube Type

TV Type

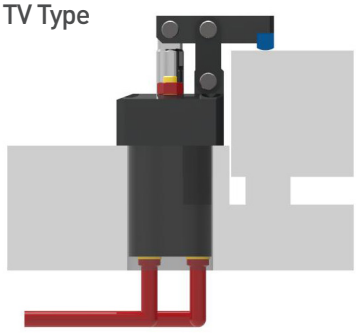

TS Type

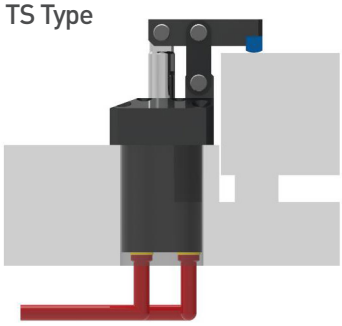

Dimensions

MODEL NO.		HGC-2502TV	HGC-3203TV	HGC-4005TV
DIMENSIONS (mm)	BA	8.5	8	8
	BB	13.5	13	13
	BD	15	18.5	21
	BE	15	18.5	21
	BF	18	21.5	26
	X	1/8	1/8	1/4

MODEL NO.		HGC-2502TS	HGC-3203TS	HGC-4005TS
DIMENSIONS (mm)	BJ	16	21	23
	BK	12	19	20
	X	1/8	1/8	1/4

TV Type

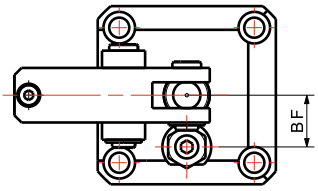

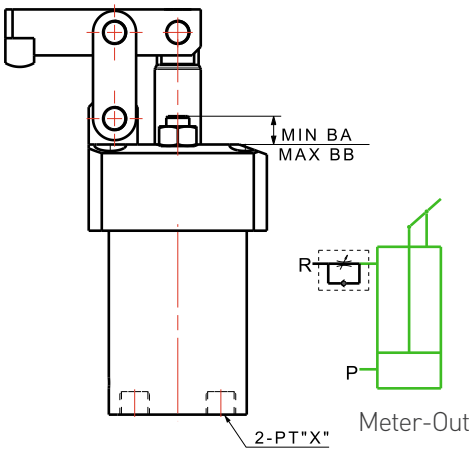

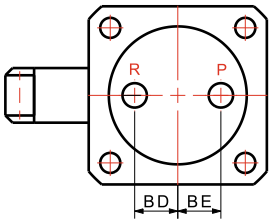

TS Type

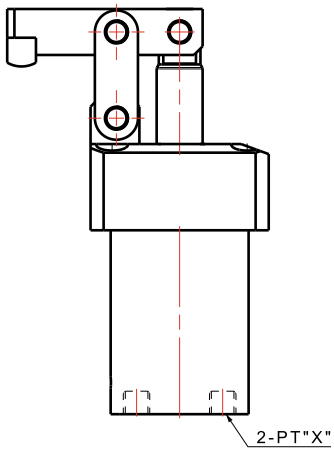

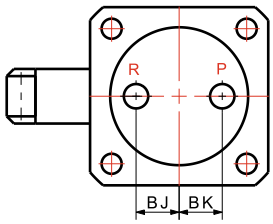

Hinge(Link) Clamp Pneumatic Type

Piping Method

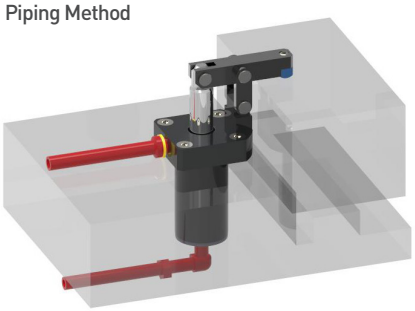

Model No.

HGC-1519A

HGC	–	15	19	A
1		2	3	4

1 Clamp Type
HGC = HINGE CLAMP

2 Piston Diameter
ex) 15 = ø15

3 Piston Rod Stroke
ex) 19 = 19mm

4 Type
› A = Pneumatic (Air)

Specification

* 클램핑력은 표준치수 레버적용 기준임.
* The clamping force in the table below relates to the standard dimension lever.

MODEL NO.		HGC-1519A	HGC-2024A	HGC-2527A	HGC-3035A	HGC-4040A	HGC-5051A	HGC-6353A
Clamping Force(kgf)	@ 5 kgf/cm^2	9	16	25	35	63	98	156
Effective Area(cm^2)		1.76	3.14	4.90	7.06	12.56	19.62	31.15
Piston Diameter(mm)		ø 15	ø 20	ø 25	ø 30	ø 40	ø 50	ø 63
Stroke(mm)	Total	19	24	27	35	40	51	53
	Extra	2	2	2	3	3	3	3
Operating Pressure Range		3~9.9kgf/cm^2						
Operating Temperature Range		0~60˚C						
Piston Speed		8~100mm/s						
Weight(kg)		0.23	0.37	0.54	1.24	1.70	2.86	4.29

Clamping Force Calculation Formula

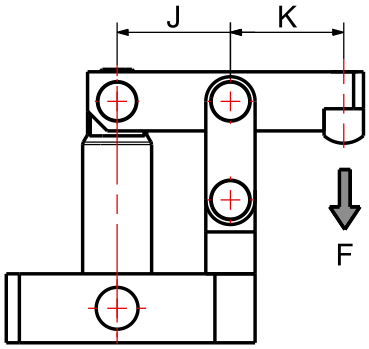

Pneumatic Clamp

클램핑력은 치수 K와 사용압력에 따라 변합니다.
아래의 계산식을 통해 클램핑력을 구해 주십시오.

Clamping force varies depending on dimension K and operating pressure.
Use below formula to calculate clamping force.

› F = Clamping Force(kgf)
› P = Pneumatic Pressure(kgf/cm^2)
› K = 옆의 도면 참조 Refer to Drawing (mm)

PNUEMATIC

HGC-1519A : F = 28.2 x P / K
HGC-2024A : F = 62.8 x P / K
HGC-2527A : F = 112.7 x P / K
HGC-3035A : F = 211.8 x P / K
HGC-4040A : F = 439.6 x P / K
HGC-5051A : F = 882.9 x P / K
HGC-6353A : F = 1,557.5 x P / K

Hinge(Link) Clamp Pneumatic Type

Features

1. 공압으로 작동
2. 편리한 배관
3. 빠른 제품 장탈착
4. 내경범위 : ø15~63
5. 작동압력 : 3~9.9kgf/cm²
6. 사용온도 : 0~60°C
7. 피스톤 속도 : 8~100mm/s
8. 레버는 옵션

1. Operating by pneumatic pressure
2. Easy piping
3. Rapid loading and removal of workpiece
4. Piston Diameter : ø15~63
5. Operating Pressure : 3~9.9kgf/cm²
6. Operating Temperature : 0~60°C
7. Piston Speed : 8~100mm/s
8. Lever is option item

› HGC - 15 19 A
① ② ③

① Piston Diameter(mm) ② Total stroke(mm) ③ Pneumatic Type

Piping Method

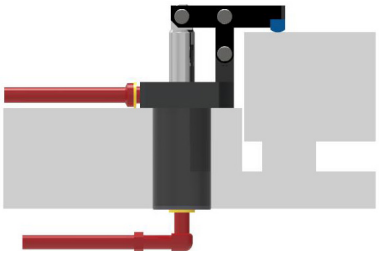

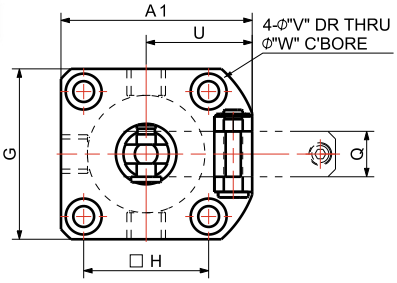

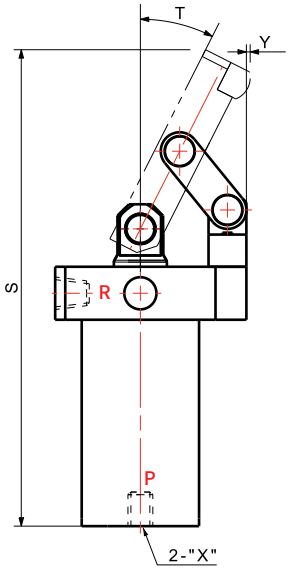

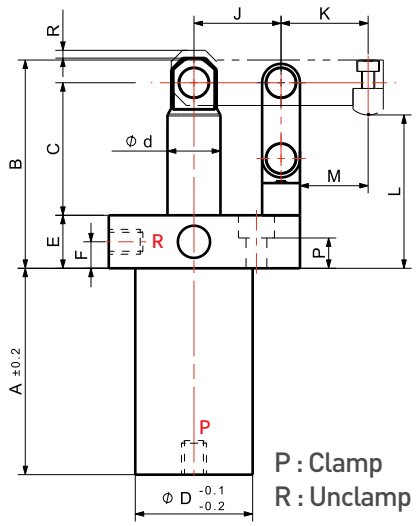

P : Clamp
R : Unclamp

LEVER (OPTION)

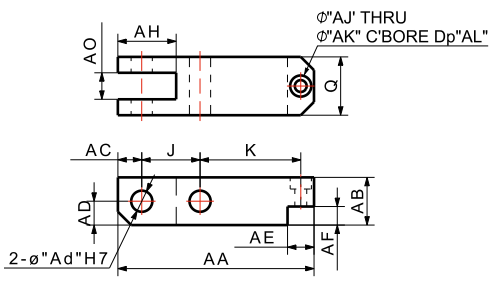

PAD (OPTION)

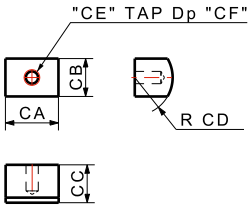

Dimensions

MODEL NO.		HGC-1519A	HGC-2024A	HGC-2527A	HGC-3035A	HGC-4040A	HGC-5051A	HGC-6353A
DIMENSIONS (mm)	A	45	50	54.5	76.5	81.5	101.5	105
	A1	37	45	50.5	64	74	91.5	105
	B	43.5	49.5	55	78.5	83.5	96.5	100
	C	30.5	31	35	50.5	55.5	67.5	69
	øD	20	25	31	37	47	58	72
	ød	8	12	14	18	20	22.4	28
	E	13	14	14	18	18	20	20
	F	5	5.5	7	9	9	10	10
	G	32	40	45	52	62	77	88
	H	22	28	33	37	47	57	67
	J	16	20	23	30	35	45	50
	K	16	20	23	30	35	45	50
	L	31.5	37.5	40.5	57.5	62.5	75.5	75
	M	11	15	18	22	27	37	39
	P	8.5	8	8	11	10	11	11
	Q	9	9	12	19	19	22	25
	R	2	2	2	3	3	3	3
	S	101.4	114.8	125.8	175.7	188.7	228.1	238.9
	T	25.8°	25.1	26.8	26.3	28.5	29.5	33
	U	21	25	28	38	43	53	61
	V	4.5	5.5	5.5	7	7	9	9
	W	8	9.5	9.5	11	11	14	14
	X	M5	M5	PT 1/8	PT 1/8	PT 1/8	PT 1/8	PT 1/8
	Y	0.3	0.7	1	0.6	1.3	3.3	6.9
	AA	40.5	49	56	74	84	104	117
	AB	9	9	12	19	19	18	22
	AC	4.5	5	6	9	9	9	11
	AD	4.5	4.5	6	9	9	9	11
	Ad	5	5	5	8	8	8	10
	AE	8	8	8	10	10	10	12
	AF	4	4	4.5	8	8	7	9
	AH	12	13.5	14.5	23	23	22	26
	AJ	3.5	3.5	3.5	4.5	4.5	4.5	6
	AK	6	6	6	8	8	8	9.5
	AL	3	3	3	4	4	4	6
	AO	4	4	5	9	9	10	12
	CA	8	8	8	14	14	14	16
	CB	8	8	8	10	10	10	12
	CC	7	7	7	10	10	10	12
	CD	6	6	6	10	10	10	10
	CE	M3	M3	M3	M4	M4	M4	M5
	CF	4.5	4.5	4.5	6	6	6	6

설계시 주의 사항 Cautions for design

1. 사용 압력 범위는 15~150kgf/cm² 입니다.
   (단, Compact Type과 Tube, TV, TS Type은 70kgf/cm² 이하에서만 사용)

   The range of operating pressure is 15~150 kgf/cm².
   (But, Compact, T, TV and TS types, use only under 70 kgf/cm²)

2. 그림에서 K가 J에 비하여 현격하게 짧을 때는 최고 사용 압력을 기준으로 비율에 맞춰 공급압력을 낮춰 주십시오.

   As shown in the figure, when K is significantly shorter than J, the operating pressure should be lowered in proportion to the maximum working pressure.

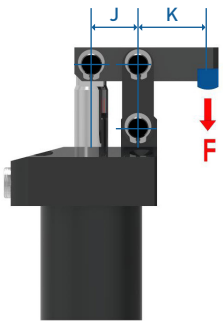

3. 클램프 할 때 레버가 취부면과 평행이 되도록 높이를 조절해서 클램핑 해 주십시오. (허용각도 ±3)

   When clamping, adjust the height to ensure the lever is parallel to the mounting surface. (Tolerance : ±3°)

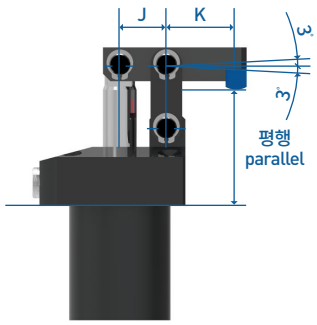

4. 피스톤 로드에 축 방향 이외의 힘이 걸리지 않도록 하십시오.

   Do not apply force to the piston rod other than in the axial direction.

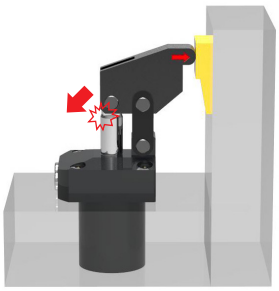

5. 경사면을 클램핑 할 때 클램프를 경사면과 평행이 되도록 설치 하십시오.

   When clamping a slope, make sure the clamp surface is parallel to the slope.

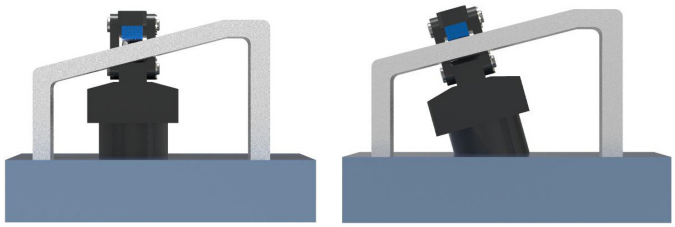

× ○

6. 용접지그 등에 사용할 때는 스패터(spatter)가 로드에 달라 붙지 않게 조치하십시오.

   When using on a welding jig, ensure the spatter does not stick to the rod.

설치시 주의사항 Cautions for installation

1. 유압유는 KIXX RD HD 32(GS 칼텍스-ISO VG 32)또는 동급을 사용하십시오.
   Use hydraulic oil KIXX RD HD 32(GS Caltex-ISO VG 32) or equivalent.

2. 배관 전에 파이프, 니플, 지그의 유로 등은 철저히 버(BURR)를 제거하고 깨끗이 청소한 후 사용하십시오.
   Before piping, remove burr thoroughly and clean flow channels of pipe, nipple and jig.

3. 배관 후 초기에는 관로 내에 공기가 들어 있으므로 에어빼기를 하신 후 사용 하십시오.
   Air in the pipe or manifold must be removed before using it.

4. 회로 안의 에어빼기를 한 후 속도 조정을 하십시오.
   After removing air in the circuit, please adjust speed.

5. 테프론 테이프는 아래 그림과 같이 니플의 나사산을 1~2 산 남겨 놓고 감아 주십시오.
   As shown in the figure below, teflon tape should be wound, leaving one or two threads of the nipple.

6. 힌지클램프의 취부는 강도 구분 12.9 볼트를 사용하고, 아래의 권장체결 토크표를 참고로 체결 해 주십시오.
   Use bolts with ISO 898-1 class 12.9 to mount hinge clamp and tighten with reference to the recommended tightening torque table below.

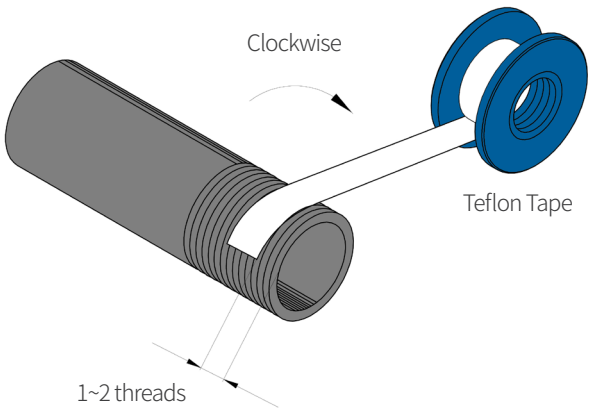

[취부볼트 권장체결토크 (강도 구분 12.9)]

[Recommended screwing torque for attachment bolt(ISO 898-1 class)]

Bolt size	Torque
M4 x 0.7	29 kgf.cm
M5 x 0.8	71 kgf.cm
M6 x 1	112 kgf.cm
M8 x 1.25	255 kgf.cm
M10 x 1.5	499 kgf.cm
M12 x 1.75	612 kgf.cm

1kgf·cm = 0.0981N·m

취급시 주의사항 Cautions for operation

1. 완벽하게 안전이 확보 되었다고 확신이 왔을 때 전원을 차단하고 수리 점검 작업에 들어 가십시오.
   When you are confident of safety, turn off the power and start troubleshooting.

2. 힌지클램프 작동 중 클램프 동작 범위 내에 신체를 넣지 마십시오.
   Care should be taken to stay well clear of the clamping range during hinge clamp operation.

3. 제품을 분해 또는 개조를 하면 보증기간 내에 있어도 보증수리가 불가하며, 내부 부품이 변형 또는 분실될 수 있습니다.
   The product warranty will be void in cases of product modification or disassembly. Doing so may deform or lose internal parts.

4. 고정한 부품들이 느슨한지 점검해 주십시오.
   Check if all parts are fastened.

5. 유압유의 상태를 정기적으로 확인하십시오.
   Please check hydraulic oil regulaly.

6. 장기간 가동하지 않았던 장비는 사전에 정상 작동을 확인하십시오.
   The performance of equipment should be checked in advance in cases of extended downtime.

7. 공압용 클램프 사용시 유입되는 수분은 제품의 부식, 겨울철 동결로 성능저하 및 고장의 주요 원인이 될 수 있으므로 수분제거기를 필히 사용하십시오.
   Moisture entering during pneumatic clamp operation can be a major cause of failure and performance decrease due to corrosion and freezing in winter.

8. 피스톤 로드 주변을 정기적으로 청소하여 항상 청결을 유지하십시오.
   Clean the area around the piston rod as part of regular maintenance.

Swing Clamp Applications

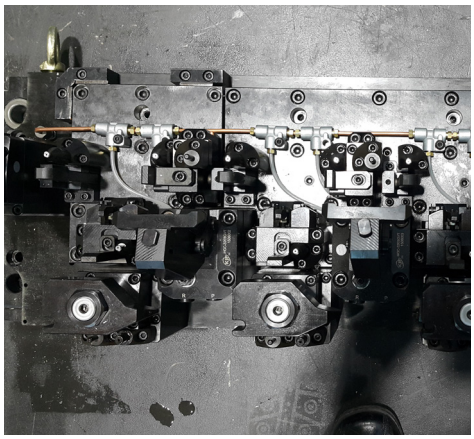

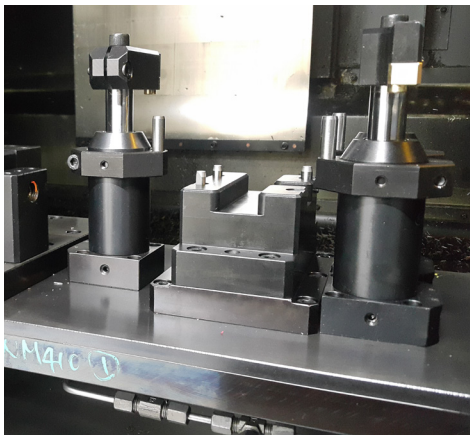

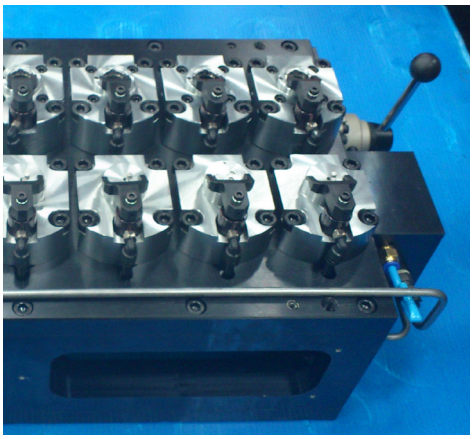

Swing Clamp Types

Compact type

Top Flange type

Bottom Flange type

Pneumatic type

Swing Clamp Introduction

스윙 클램프는 실린더 내부 리드 홈에 의해 회전 후 직진하도록 디자인된 제품으로 공작물을 로딩 / 언로딩할 때 간섭을 쉽게 회피하고 컴팩트한 사이즈는 설계자의 설계편의성을 최대로 고려한 디자인입니다. 클램프력이 공작물에 수직방향으로 작용하므로 안정된 클램프를 할 수 있습니다. 설치상황에 가장 적합한 제품을 선정할 수 있도록 다양한 타입과 사이즈가 있습니다.

Swing clamp is designed to straighten after being rotated by the led groove inside the cylinder.
Swing clamp dodges interference when loading a structure and its compact size is intended to maximize design convenience for the designer.
Clamping force is applied to a structure in a vertical direction to ensure stable clamping.
The products are available in various types and sizes to suit your installation environment.

Operation

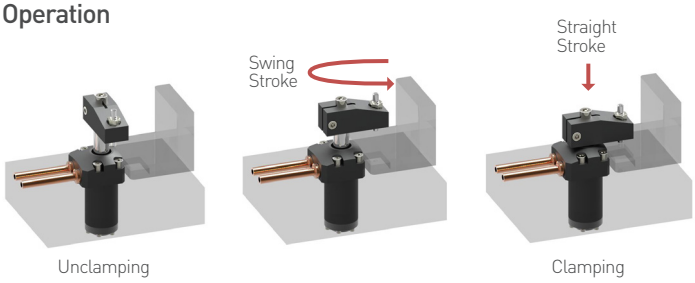

Installation

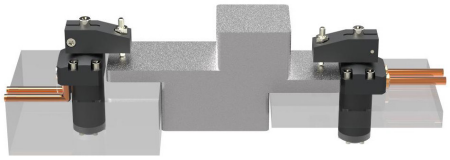

Swing direction (SDR & SDL)

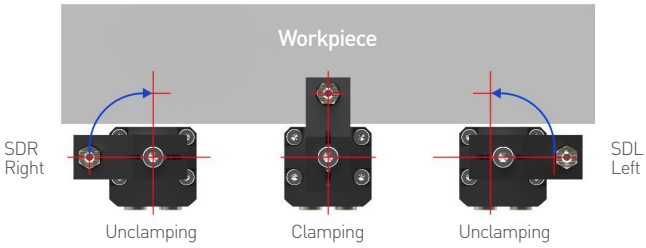

Clamp 높이 선정 방법
How to choose clamp height

반드시 직선 스트로크 구간 내에서 클램핑이 이루어지도록 설치해야 하며 가능한 언클램핑시 A의 치수를 아래 공식에 의해 세팅한다.
A = Swing Stroke + Straight Stroke - 2mm

Swing clamp must be installed to ensure clamping occurs within the straight stroke section. If possible, the dimension of A should be set by the following formula
A = Swing Stroke + Straight Stroke - 2mm

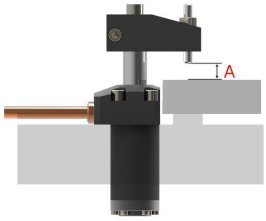

레버 고정시 주의 사항
Cautions for fixing lever

1. 레버를 고정할 때, 그림과 같이 클램핑한 위치에 렌치볼트, 'A'를 먼저 체결한다.
2. 렌치볼트(Wrench Bolt), 'B'를 살짝 체결한다. 그렇지 않으면 실린더핀(Cylinder Pin)이 파손되므로 제품의 사용이 불가능하다.
   ('B'를 체결시 레버를 바이스 혹은 몽키스패너로 고정해야 한다)
   위의 사항을 지키지 않아 생기는 손상에 대해서는 책임을 지지 않는다.

1. When fastening a lever, fasten the wrench bolt 'A' first on the clamped position as shown in figure.
2. Fasten lightly the wrench bolt 'B'. Otherwise, the product may be unusable due to cylinder pin damage.
   (When tightening 'B', the lever must be fixed with a vise or spanner.)
   We are not responsible for damage caused by failure to comply with the instructions aforementioned.

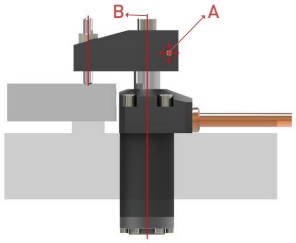

Swing Clamp Compact Type (Low Pressure)

Compact type vs Gasket type

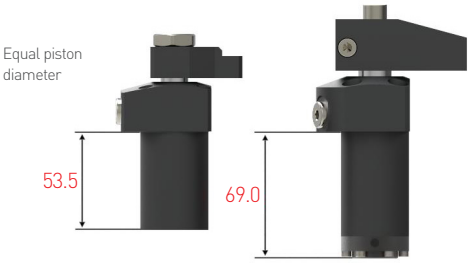

CSDR/L-2516G SDR/L-2522G

Manifold Method

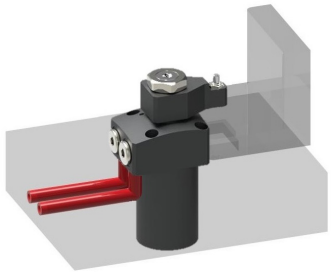

Rod Types

Standard Pin Hole Quick Change

Model No.

CSDR-2516GV

CSDR	–	25	16	GV	–	30
1		2	3	4		5

1 Clamp Type
SDR = SWING RIGHT
SDL = SWING LEFT

2 Piston Diameter
ex) 25 = ø25

5 Swing Angle
No sign = 90°
ex) 30 = 30°

3 Pistion Rod Stroke
ex) 16 = 16mm

4 Type
- G = Gasket
- GV = Gasket + Flow control valve
- GP = Gasket + Pin Hole
- GPV = Gasket + Pin Hole + Flow Control Valve
- GQ = Gasket + Quick Change
- GQV = Gasket + Quick Change + Flow Control Vavle

Specification

MODEL NO.		CSDR / L-2516 □			CSDR / L-3017 □			CSDR / L-3618 □			CSDR / L-4220 □			CSDR / L-5026 □			CSDR / L-6028 □		
Type	Gasket	G	GP	GQ	G	GP	GQ	G	GP	GQ	G	GP	GQ	G	GP	GQ	G	GP	GQ
		GV	GPV	GQV	GV	GPV	GQV	GV	GPV	GQV	GV	GPV	GQV	GV	GPV	GQV	GV	GPV	GQV
Weight (kg)		0.90	0.73	0.75	1.33	1.05	1.09	1.52	1.36	1.44	1.78	1.66	1.76	3.21	3.01	3.19	5.80	4.28	4.41
		0.92	0.75	0.76	1.35	1.07	1.09	1.83	1.38	1.42	1.80	1.68	1.74	3.25	3.05	3.15	5.81	4.29	4.42
Cylinder Force(kgf)		219			316			446			625			879			1,305		
Piston Diameter (mm)		ø25			ø30			ø36			ø42			ø50			ø60		
Effective Area (cm^2)		3.14			4.52			6.37			8.94			12.56			18.64		
Stroke (mm)	Swing	8			9			10			10			16			16		
	Straight	8			8			8			10			10			12		
	Total	16			17			18			20			26			28		
Oil Capacity (cm^3)	At Clamping	5.02			7.69			11.47			17.88			32.66			52.20		
Operating Pressure Range		20 ~ 70 kgf/cm^2																	
Operating Temperature Range		0 ~ 60°C																	

GV type 주문 가능합니다.
GV type is available.

P : Clamp
R : Unclamp

Compact Swing Clamp G / GV Type

Features

1. 컴팩트 디자인
2. 레버 교환 가능
3. 빠른 제품 장탈착
4. 내경범위 : ø25~60
5. 작동압력 : 20~70kgf/cm²
6. 사용온도 : 0~60°C
7. 레버 조립 시 고정 상태 에서 볼트 체결
8. 레버는 옵션 사항임

1. Compact design
2. Lever exchangeable
3. Rapid installation and removal of workpiece
4. Piston Diameter : ø25~60
5. Operating Pressure : 20~70kgf/cm²
6. Operating Temperature : 0~60°C
7. When assembling the lever, the bolts should be fastened in a fixed state.
8. Lever is option item

› CSDR - 25 16 G CSDR - 25 16 GV
① ② ③ ④ ① ② ③ ④

① R=Right, L=Left ② Piston Diameter (mm) ③ Total Stroke(mm)
④ G=Gasket / GV=Gasket+Side Valve Type

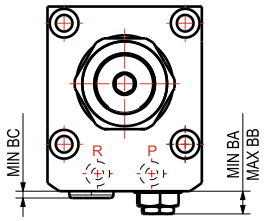

GV TYPE

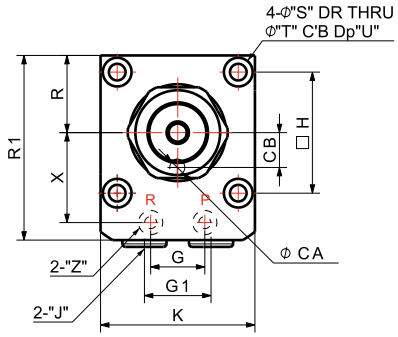

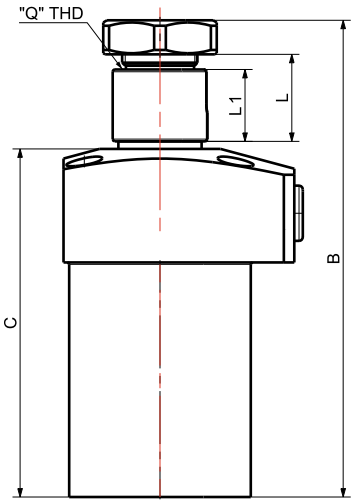

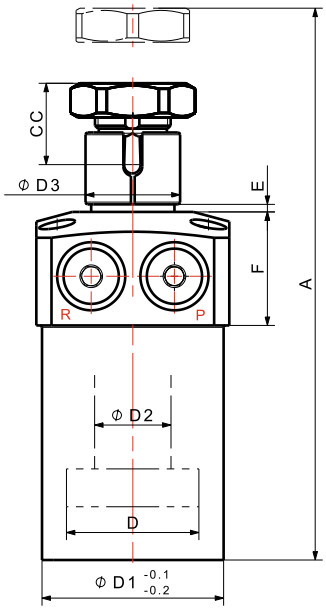

LEVER (OPTION)

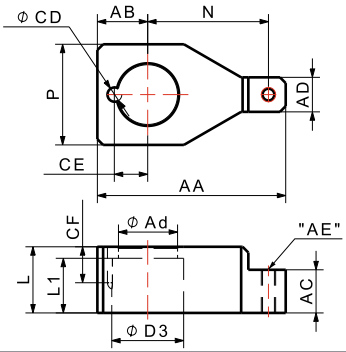

Dimensions

MODEL NO.		CSDR/L-2516G	CSDR/L-3017G	CSDR/L-3618G	CSDR/L-4220G	CSDR/L-5026G	CSDR/L-6028G
DIMENSIONS (mm)	A	122.5	134	144	146	182.5	198
	B	106.5	117	126	126	156.5	170
	C	80.5	88	92	88	114.5	122
	øD	25	30	36	42	50	60
	øD1	37	42	48	55	65	75
	øD2	15	18	22	25	30	35
	øD3	17	20	25	28	34	40
	E	2	2	2	2	2	2
	F	27	30	30	28	31	37
	G	16	18	22	24	30	32
	G1	18	21	22	24	30	32
	H	31.5	36	40	47	55	63
	J	G1/8	G1/8	G1/8	G1/8	G1/4	G1/4
	K	40	47	51	60	70	80
	L	17	19	23	26	29	35
	L1	14	16	19	22	25	31
	N	32	36.5	42	50	57	65
	P	26	28	35	38	50	58
	Q	M14 x 1.5P	M16 x 1.5P	M20 x 1.5P	M22 x 1.5P	M27 x 1.5P	M28 x 1.5P
	R	20	23.5	25.5	30	35	40
	R1	49	56	61	69	81	92
	S	4.5	5.5	5.5	6.8	6.8	9
	T	8	9.5	9.5	11	11	14
	U	7	12	11	11.5	13	16
	X	23.5	26	30	33.5	39.5	45
	Z	P5-1B	P5-1B	P5-1B	P5-1B	P7-1B	P7-1B
	AA	50	56.5	65.5	77	92	105
	AB	13	14	17.5	19	25	29
	AC	12	13	15	15	15	20
	AD	10	12	12	17	20	22
	øAd	15	17	21	23.5	29	33
	AE	M5	M6	M6	M8	M10	M12
	BA	7.1	7.1	6.6	7.1	7.65	7.15
	BB	13.7	13.7	13.2	13.7	17.25	16.75
	BC	3.9	3.9	3.4	3.9	3.8	3.3
	øCA	4	4	5	6	6	8
	CB	8	9	11.5	13	15.5	18
	CC	17.4	18.5	21.5	24.5	27.5	28.5
	øCD	4	4	5	6	6	8
	CE	8	9	11.5	13	15.5	18
	CF	10.4	10.5	12.5	14.5	16.5	17.5

Compact Swing Clamp GP / GPV Type (Pin Hole)

Features

1. 핀 홀 로드형
2. 천칭 레버 적용형
3. 내경범위 : ø25~60
4. 작동압력 : 20~70kgf/cm²
5. 사용온도 : 0~60°C
6. 레버는 옵션 사항임

1. Pin hole rod type
2. Balance lever application type
3. Piston Diameter : ø25~60
4. Operating Pressure : 20~70kgf/cm²
5. Operating Temperature : 0~60°C
6. Lever is option item

› CSDR - 25 16 GP CSDR - 25 16 GPV
① ② ③ ④ ① ② ③ ④

① R=Right, L=Left ② Piston Diameter (mm) ③ Total Stroke(mm)
④ GP = Gasket + Pin Hole / GPV = Gasket + Pin Hole + Side Valve Type

GPV type 주문 가능합니다.
GPV type is available.

P : Clamp
R : Unclamp

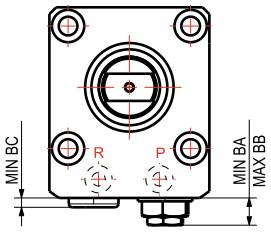

GPV TYPE

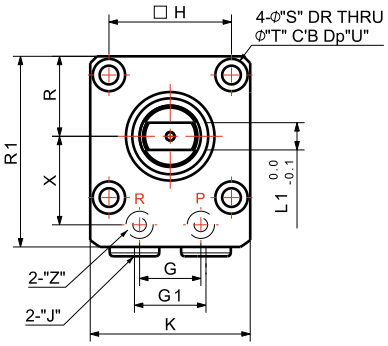

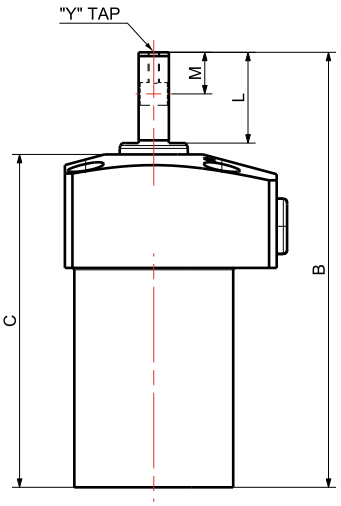

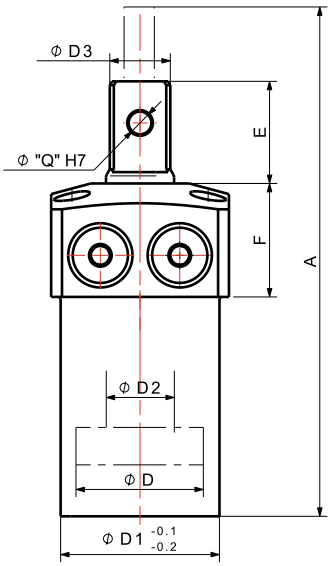

LEVER (OPTION)

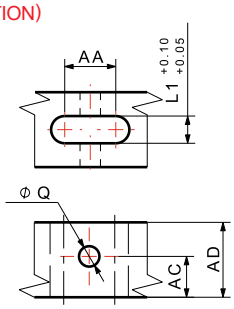

Dimensions

MODEL NO.		CSDR/L-2516GP	CSDR/L-3017GP	CSDR/L-3618GP	CSDR/L-4220GP	CSDR/L-5026GP	CSDR/L-6028GP
DIMENSIONS (mm)	A	120.5	132	142	144	183.5	198
	B	104.5	115	124	124	157.5	170
	C	80.5	88	92	88	114.5	122
	øD	25	30	36	42	50	60
	øD1	37	42	48	55	65	75
	øD2	15	18	22	25	30	35
	øD3	13.5	16	20	23	28	33.5
	E	24	27	32	36	43	48
	F	27	30	30	28	31	37
	G	16	18	22	24	30	32
	G1	18	21	22	24	30	32
	H	31.5	36	40	47	55	63
	J	G1/8	G1/8	G1/8	G1/8	G1/4	G1/4
	K	40	47	51	60	70	80
	L	21	24	27.5	31.5	38.5	43.5
	L1	7	8	10	12	14	16
	M	9	11	12	12.5	16.5	19
	øQ	6	6	8	10	13	13
	R	20	23.5	25.5	30	35	40
	R1	49	56	61	69	81	92
	S	4.5	5.5	5.5	6.8	6.8	9
	T	8	9.5	9.5	11	11	14
	U	7	12	11	11.5	13	16
	X	23.5	26	30	33.5	39.5	45
	Y	M3	M3	M4	M5	M6	M6
	Z	P5-1B	P5-1B	P5-1B	P5-1B	P7-1B	P7-1B
	AA	13	15	20	23	28	33
	AC	11	12	14.5	18	21	23.5
	AD	19	22	25.5	29.5	36.5	41.5
	BA	7.1	7.1	6.6	7.1	7.65	7.15
	BB	13.7	13.7	13.2	13.7	17.25	16.75
	BC	3.9	3.9	3.4	3.9	3.8	3.3

Compact Swing Clamp GQ / GQV Type (Quick Change)

Features

1. 빠른 레버 교환
2. 빠른 제품 장탈착
3. 내경범위 : ø25~60
4. 작동압력 : 20~70kgf/cm²
5. 사용온도 : 0~60°C
6. 레버 조립 시 고정 상태 에서 볼트 체결
7. 레버는 옵션 사항임

1. Quick lever change
2. Rapid installation and removal of workpiece
3. Piston Diameter : ø25~60
4. Operating Pressure : 20~70kgf/cm²
5. Operating Temperature : 0~60°C
6. When assembling the lever, the bolts should be fastened in a fixed state.
7. Lever is option item

› CSDR - 25 16 GQ (① ② ③ ④) CSDR - 25 16 GQV (① ② ③ ④)

① R=Right, L=Left ② Piston Diameter (mm) ③ Total Stroke(mm)
④ GQ = Gasket + Quick change / GQV = Gasket + Quick change + Side Valve Type

GQV type 주문 가능합니다.
GQV type is available.

P : Clamp
R : Unclamp

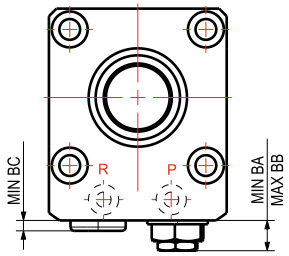

GQV TYPE

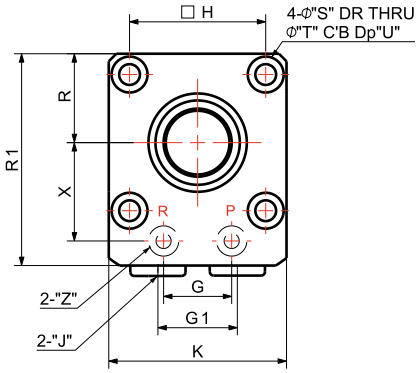

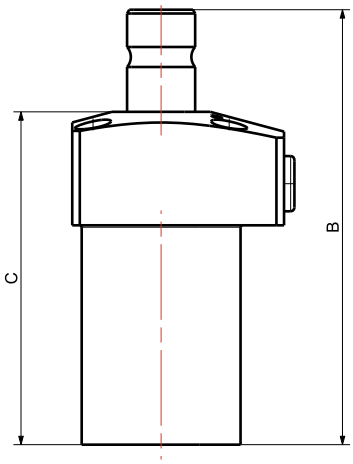

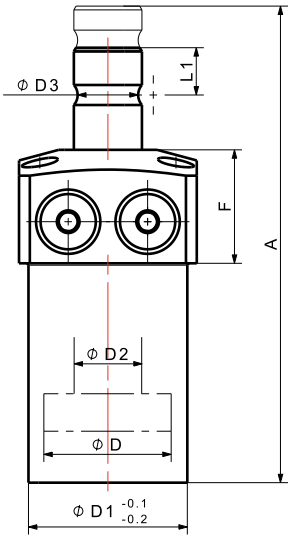

LEVER (OPTION)

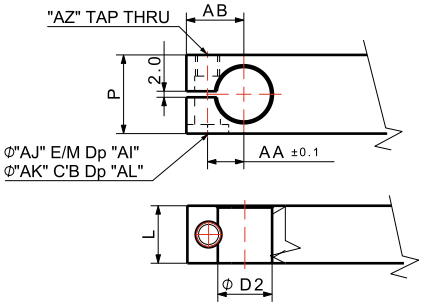

Dimensions

MODEL NO.		CSDR/L-2516GQ	CSDR/L-3017GQ	CSDR/L-3618GQ	CSDR/L-4220GQ	CSDR/L-5026GQ	CSDR/L-6028GQ
DIMENSIONS (mm)	A	120.5	132	142	144	183.5	198
	B	104.5	115	124	124	157.5	170
	C	80.5	88	92	88	114.5	122
	øD	25	30	36	42	50	60
	øD1	37	42	48	55	65	75
	øD2	15	18	22	25	30	35
	øD3	12.9	16	18.9	22	26	31
	E	24	27	32	36	43	48
	F	27	30	30	28	31	37
	G	16	18	22	24	30	32
	G1	1 8	21	22	24	30	32
	H	31.5	36	40	47	55	63
	J	G1/8	G1/8	G1/8	G1/8	G1/4	G1/4
	K	40	47	51	60	70	80
	L	22	25	30	34	40	46
	L1	11	12.5	15	17	20	23
	P	22	26	32	36	45	53
	R	20	23.5	25.5	30	35	40
	R1	49	56	61	69	81	92
	S	4.5	5.5	5.5	6.8	6.8	9
	T	8	9.5	9.5	11	11	14
	U	7	12	11	11.5	13	16
	X	23.5	26	30	33.5	39.5	45
	Z	P5-1B	P5-1B	P5-1B	P5-1B	P7-1B	P7-1B
	AA	9.5	11.6	14.5	16.5	20	23.5
	AB	15	19	23	26.5	31.5	36.5
	AI	15.5	19	22	26	31.5	38
	AJ	6.5	8.5	11	12.5	14.5	16.5
	AK	11	14	18	20	23	26
	AL	2	3	4	4	5	7
	AZ	M6	M8	M10	M12	M14	M16
	BA	7.1	7.1	6.6	7.1	7.65	7.15
	BB	13.7	13.7	13.2	13.7	17.25	16.75
	BC	3.9	3.9	3.4	3.9	3.8	3.3

Swing Clamp Bottom Flange Type

Piping Method

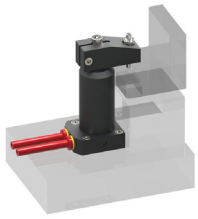

F type 1

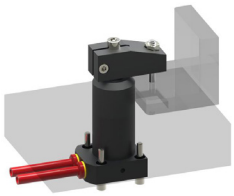

F type 2

Manifold Method

FG type

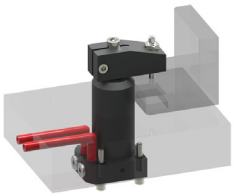

FGT type

Rod Shape

Standard

Pin Hole (P44)

Model No.

SDR-2522F

SDR	–	25	22	F	–	30
1		2	3	4		5

1 Clamp Type
SDR = SWING RIGHT
SDL = SWING LEFT

2 Piston Diameter
ex) 25 = ø25

3 Pistion Rod Stroke
ex) 22 = 22mm

4 Swing Angle
No sign = 90°
ex) 30 = 30°

5 Type

- F = Bottom Flange
- FP = Bottom Flange + Pin Hole Rod
- FG = Bottom Flange + Gasket
- FGP= Bottom Flange + Gasket + Pin Hole Rod
- FGV = Bottom Flange + Gasket + Flow Control Valve
- FGPV= Bottom Flange + Gasket + Pin Hole Rod + Flow Control Valve
- FGT = Bottom Flange + Gasket Top
- FGPT = Bottom Flange + Gasket Top + Pin Hole Rod
- FGVT = Bottom Flange + Gasket Top + Flow Control Valve
- FGPVT = Bottom Flange Gasket Top + Pin Hole Rod + Flow Control Valve

Specification

MODEL NO.		SDR / L-2522 □					SDR / L-3030 □					SDR / L-4045 □					SDR / L-5555 □				
Type		F	FG	FGV	FGT	FGVT	F	FG	FGV	FGT	FGVT	F	FG	FGV	FGT	FGVT	F	FG	FGV	FGT	FGVT
		FP	FGP	FGPV	FGPT	FGPVT	FP	FGP	FGPV	FGPT	FGPVT	FP	FGP	FGPV	FGPT	FGPVT	FP	FGP	FGPV	FGPT	FGPVT
Weight (kg)		1.23	1.24	1.25	1.24	1.25	2.21	2.25	2.26	2.24	2.25	3.97	4.02	4.03	4.02	4.03	8.27	8.34	8.36	8.34	8.36
		1.22	1.23	1.24	1.23	1.24	2.18	2.22	2.23	2.22	2.23	3.93	3.98	3.99	3.98	3.99	8.23	8.30	8.32	8.29	8.31
Cylinder Force(kgf)		590					780					1,600					3,530				
Piston Diameter (mm)		ø25					ø30					ø40					ø55				
Effective Area (cm^2)		2.36					3.13					6.41					14.13				
Stroke (mm)	Swing	12					16					16					25				
	Straight	10					14					29					30				
	Total	22					30					45					55				
Oil Capacity (cm^3)	At Clamping	5.20					9.38					28.83					77.72				
Operating Pressure Range		20 ~ 150 kgf/cm^2																			
Operating Temperature Range		0 ~ 60°C																			

Swing Clamp Bottom Flange F Type

Features

1. 하부 플랜지
2. 레버 교환 용이
3. 빠른 제품 장탈착
4. 내경범위 : ø25~55
5. 작동압력 : 20~150kgf/cm²
6. 사용온도 : 0~60°C
7. 레버 조립 시 고정 상태 에서 볼트 체결
8. 레버는 옵션 사항임

1. Bottom flange
2. Easy lever exchange
3. Rapid installation and removal of workpiece
4. Piston Diameter : ø25~55
5. Operating Pressure : 20~150kgf/cm²
6. Operating Temperature : 0~60°C
7. When assembling the lever, the bolts should be fastened in a fixed state.
8. Lever is option item

› SDR - 25 22 F
① ② ③ ④

① R=Right, L=Left ② Piston Diameter (mm) ③ Total Stroke(mm)
④ Bottom Flange Type

P : Clamp
R : Unclamp

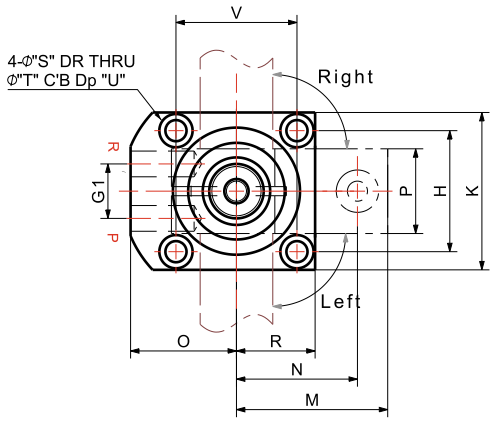

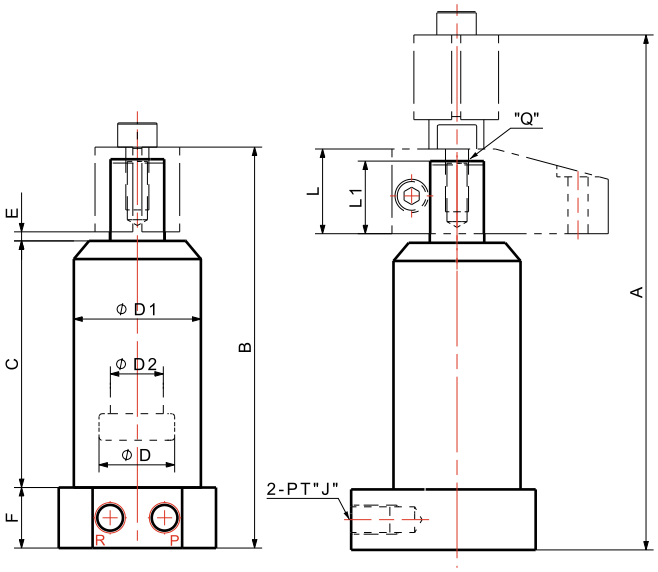

LEVER (OPTION)

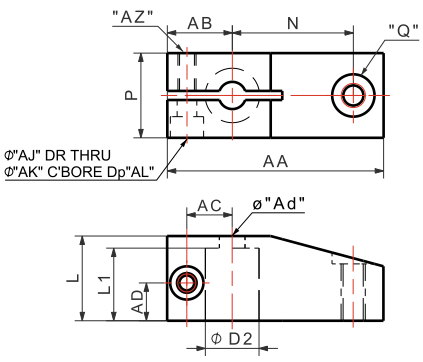

Dimensions

MODEL NO.		SDR/L- 2522F	SDR/L- 3030F	SDR/L- 4045F	SDR/L- 5555F
DIMENSIONS (mm)	A	154.5	188	223	288
	B	132.5	158	178	233
	C	81.5	98	112	160
	øD	25	30	40	55
	øD1	42	52	65	85
	øD2	18	22.4	28	35
	E	3	3	3	3
	F	20	25	28	30
	G1	18	22	24	30
	H	40	46	64	76
	J	PT 1/8	PT 1/4	PT 1/4	PT 3/8
	K	52	60	80	97
	L	28	32	35	40
	L1	24	27	29	34
	M	50	60	75	90
	N	40	50	60	70
	O	35	40	50	59
	P	28	32	38	60
	Q	M8 x 1.25P	M10 x 1.5P	M12 x 1.75P	M16 x 2.0P
	R	26	30	40	48.5
	S	7	7	9	11
	T	11	11	14	17
	U	7	7	9	11
	V	40	46	64	76
	AA	71.5	88	110	130
	AB	21.5	28	35	40
	AC	15	19	24.5	28
	AD	12.5	14	15	17
	øAd	9	11	13	17
	AJ	6.5	9	11	11
	AK	11	14	17	17
	AL	7	9	11	20
	AZ	M6	M8	M12	M16

Swing Clamp Bottom Flange FG / FGV Type

Features

1. 가스켓 타입
2. 레버 교환 용이
3. 빠른 제품 장탈착
4. 내경범위 : ø25~55
5. 작동압력 : 20~150kgf/cm²
6. 사용온도 : 0~60°C
7. 레버 조립 시 고정 상태 에서 볼트 체결
8. 레버는 옵션 사항임

1. Gasket type
2. Easy lever exchange
3. Rapid installation and removal of workpiece
4. Piston Diameter : ø25~55
5. Operating Pressure : 20~150kgf/cm²
6. Operating Temperature : 0~60°C
7. When assembling the lever, the bolts should be fastened in a fixed state.
8. Lever is option item

› SDR - 25 22 FG SDR - 25 22 FGV
① ② ③ ④ ① ② ③ ④

① R=Right, L=Left ② Piston Diameter (mm) ③ Total Stroke(mm)
④ FG = Bottom Flange Gasket / FGV = Bottom Flange Gasket + Side Vavle Type

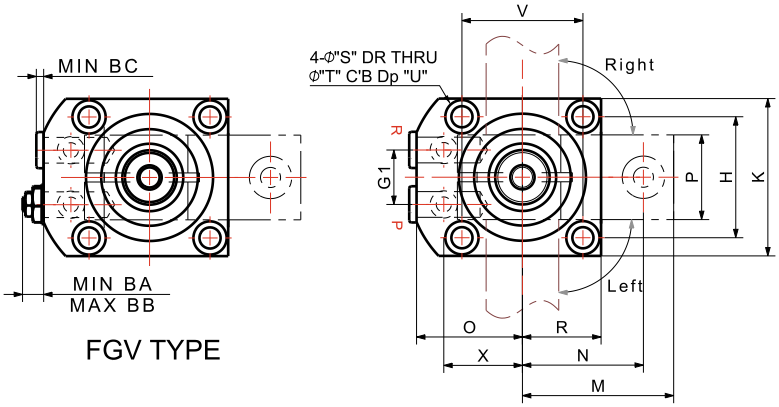

P : Clamp
R : Unclamp

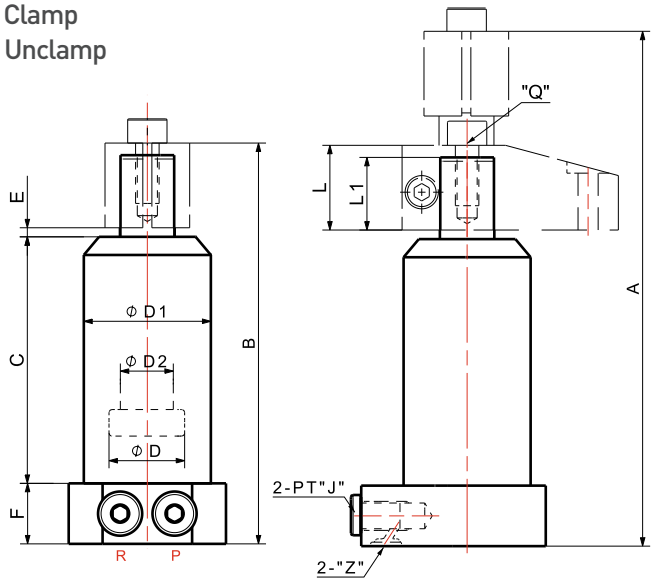

LEVER (OPTION)

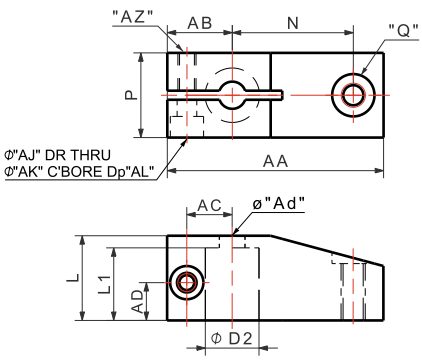

Dimensions

MODEL NO.		SDR/L- 2522FG	SDR/L- 3030FG	SDR/L- 4045FG	SDR/L- 5555FG
DIMENSIONS (mm)	A	154.5	188	223	288
	B	132.5	158	178	233
	C	81.5	98	112	160
	øD	25	30	40	55
	øD1	42	52	65	85
	øD2	18	22.4	28	35
	E	3	3	3	3
	F	20	25	28	30
	G1	18	20	24	30
	H	40	46	64	76
	J	PT 1/8	PT 1/4	PT 1/4	PT 3/8
	K	52	60	80	97
	L	28	32	35	40
	L1	24	27	29	34
	M	50	60	75	90
	N	40	50	60	70
	O	35	40	50	59
	P	28	32	38	60
	Q	M8 x 1.25P	M10 x 1.5P	M12 x 1.75P	M16 x 2.0P
	R	26	30	40	48.5
	S	7	7	9	11
	T	11	11	14	17
	U	7	7	9	11
	V	40	46	64	76
	X	26	31	38	47
	Z	P6	P6	P6	P7
	AA	71.5	88	110	130
	AB	21.5	28	35	40
	AC	15	19	24.5	28
	AD	12.5	14	15	17
	øAd	9	11	13	17
	AJ	6.5	9	11	11
	AK	11	14	17	17
	AL	7	9	11	20
	AZ	M6	M8	M12	M16
	BA	7.1	7.2	7.2	5.7
	BB	13.7	16.8	16.8	15.3
	BC	3.9	3.3	3.3	1.8

Swing Clamp Bottom Flange FGT / FGVT Type

Features

1. 플랜지 상부 가스켓
2. 레버 교환 용이
3. 빠른 제품 장탈착
4. 내경범위 : ø25~55
5. 작동압력 : 20~150kgf/cm²
6. 사용온도 : 0~60°C
7. 레버 조립 시 고정 상태에서 볼트 체결
8. 레버는 옵션 사항임

1. Gasket located on the top of flange
2. Easy lever exchange
3. Rapid installation and removal of workpiece
4. Piston Diameter : ø25~55
5. Operating Pressure : 20~150kgf/cm²
6. Operating Temperature : 0~60°C
7. When assembling the lever, the bolts should be fastened in a fixed state.
8. Lever is option item

› SDR - 25 22 FGT (① ② ③ ④) SDR - 25 22 FGVT (① ② ③ ④)

① R=Right, L=Left ② Piston Diameter (mm) ③ Total stroke(mm)
④ FGT = Bottom Flange Gasket Top / FGVT = Bottom Flange Gasket Top + Side Valve Type

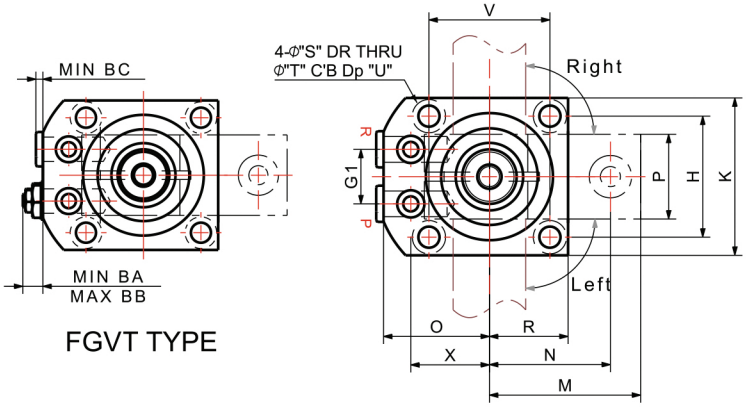

FGVT TYPE

P : Clamp
R : Unclamp

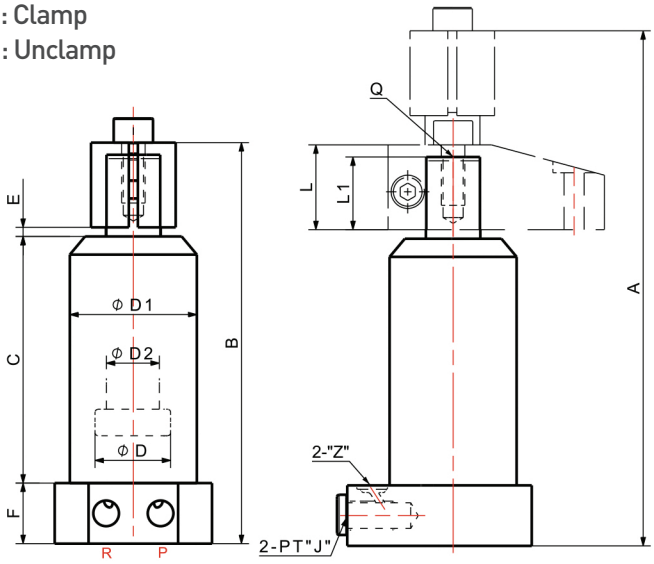

LEVER (OPTION)

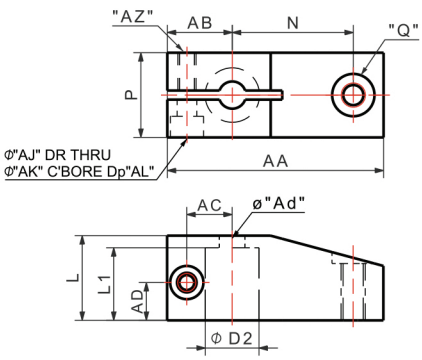

Dimensions

MODEL NO.		SDR/L- 2522FGT	SDR/L- 3030FGT	SDR/L- 4045FGT	SDR/L- 5555FGT
DIMENSIONS (mm)	A	154.5	188	223	288
	B	132.5	158	178	233
	C	81.5	98	112	160
	øD	25	30	40	55
	øD1	42	52	65	85
	øD2	18	22.4	28	35
	E	3	3	3	3
	F	20	25	28	30
	G1	18	20	24	30
	H	40	46	64	76
	J	PT 1/8	PT 1/4	PT 1/4	PT 3/8
	K	52	60	80	97
	L	28	32	35	40
	L1	24	27	29	34
	M	50	60	75	90
	N	40	50	60	70
	O	35	40	50	59
	P	28	32	38	60
	Q	M8 x 1.25P	M10 x 1.5P	M12 x 1.75P	M16 x 2.0P
	R	26	30	40	48.5
	S	7	7	9	11
	T	11	11	14	17
	U	7	7	9	11
	V	40	46	64	76
	X	26	31	38	47
	Z	P6	P6	P6	P7
	AA	71.5	88	110	130
	AB	21.5	28	35	40
	AC	15	19	24.5	28
	AD	12.5	14	15	17
	øAd	9	11	13	17
	AJ	6.5	9	11	11
	AK	11	14	17	17
	AL	7	9	11	20
	AZ	M6	M8	M12	M16
	BA	7.1	7.2	7.2	5.7
	BB	13.7	16.8	16.8	15.3
	BC	3.9	3.3	3.3	1.8

Swing Clamp Top Flange Type

Piping Method

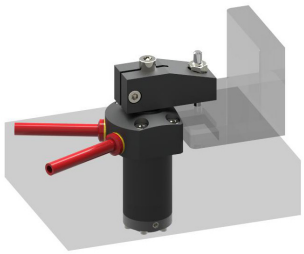

Standard

Manifold Method

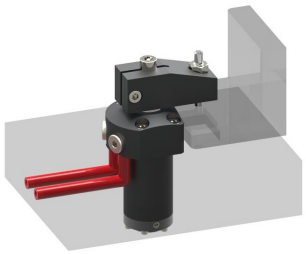

G type

Rod Shape

Standard

Pin Hole (P44)

Model No.

SDR-2522GV

SDR	–	25	22	GV	–	30
1		2	3	4		5

1 Clamp Type
SDR = SWING RIGHT
SDL = SWING LEFT

2 Piston Diameter
ex) 25 = ø25

3 Pistion Rod Stroke
ex) 22 = 22mm

4 Type
- No Sign = Standard
- P = Pin Hole Rod
- G = Gasket
- GP = Gasket + Pin Hole Rod
- GV = Gasket + Flow Control Valve
- GPV = Gasket + Pin Hole Rod + Flow Control Valve

5 Swing Angle
No sign = 90°
ex) 30 = 30°

Specification

MODEL NO.		SDR / L-2522 □			SDR / L-3030 □			SDR / L-4045 □			SDR / L-5555 □		
Type		No Sign	G	GV	No Sign	G	GV	No Sign	G	GV	No Sign	G	GV
		P	GP	GPV	P	GP	GPV	P	GP	GPV	P	GP	GPV
Weight (kg)		1.08	1.01	1.02	1.85	1.79	1.80	3.29	3.16	3.17	6.89	6.51	6.53
		1.06	1.00	1.01	1.83	1.77	1.78	3.25	3.12	3.13	6.85	6.48	6.50
Cylinder Force(kgf)		590			780			1,600			3,530		
Piston Diameter (mm)		ø25			ø30			ø40			ø55		
Effective Area (cm^2)		2.36			3.13			6.41			14.13		
Stroke (mm)	Swing	12			16			16			25		
	Straight	10			14			29			30		
	Total	22			30			45			55		
Oil Capacity (cm^3)	At Clamping	5.20			9.38			28.83			77.72		
Operating Pressure Range		20 ~ 150 kgf/cm^2											
Operating Temperature Range		0 ~ 60 °C											

Swing Clamp Top Flange Standard Type

Features

1. 나사산 하우징
2. 레버 교환 용이
3. 니플 배관
4. 내경범위 : ø25~55
5. 작동압력 : 20~150kgf/cm²
6. 사용온도 : 0~60°C
7. 레버 조립 시 고정 상태 에서 볼트 체결
8. 레버는 옵션 사항임

1. Threaded housing
2. Easy lever exchange
3. Nipple piping
4. Piston Diameter : ø25~55
5. Operating Pressure : 20~150kgf/cm²
6. Operating Temperature : 0~60°C
7. When assembling the lever, the bolts should be fastened in a fixed state.
8. Lever is option item

› SDR - 25 22
① ② ③

① R=Right, L=Left ② Piston Diameter (mm) ③ Total Stroke(mm)

P : Clamp
R : Unclamp

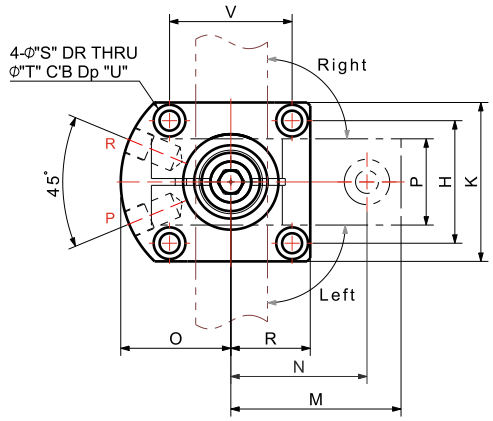

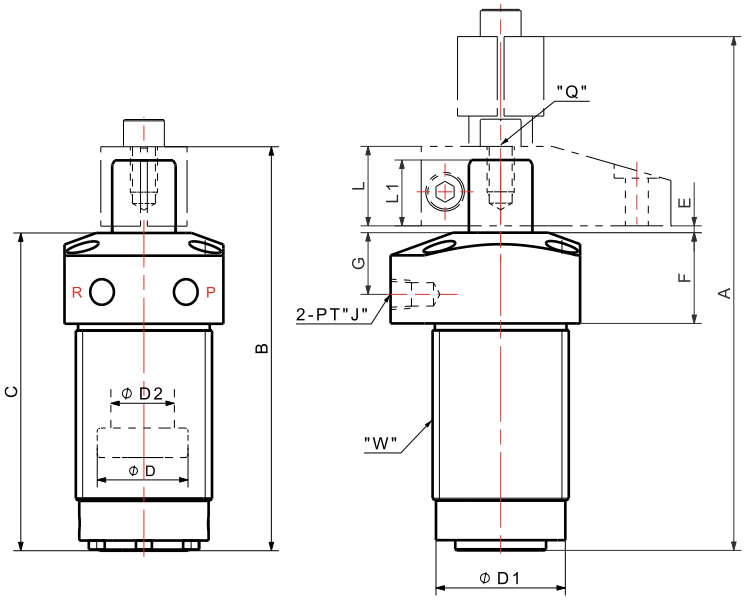

LEVER (OPTION)

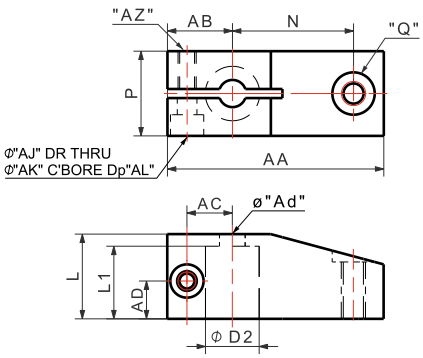

Dimensions

MODEL NO.		SDR/L- 2522	SDR/L- 3030	SDR/L- 4045	SDR/L- 5555
DIMENSIONS (mm)	A	152	188	223	280
	B	130	158	178	225
	C	99	123	140	182
	øD	25	30	40	55
	øD1	37	45.5	57	76
	øD2	18	22.4	28	35
	E	3	3	3	3
	F	30	35	40	45
	G	21	22	26	30
	H	42	42	54	70
	J	PT 1/8	PT 1/4	PT 1/4	PT 3/8
	K	55	54	70	89
	L	28	32	35	40
	L1	24	27	29	34
	M	50	60	75	90
	N	40	50	60	70
	O	32	36.5	48.5	59
	P	28	32	38	60
	Q	M8 x 1.25P	M10 x 1.5P	M12 x 1.75P	M16 x 2.0P
	R	19	27	35	44.5
	S	6.5	6.5	9	11
	T	11	11	14	17
	U	15	15	20	25
	V	25	42	54	70
	W	M40 x 1.5P	M48 x 1.5P	M60 x 1.5P	M80 x 2.0P
	AA	71.5	88	110	130
	AB	21.5	28	35	40
	AC	15	19	24.5	28
	AD	12.5	14	15	17
	øAd	9	11	13	17
	AJ	6.5	9	11	11
	AK	11	14	17	17
	AL	7	9	11	20
	AZ	M6	M8	M12	M16

Swing Clamp Top Flange G / GV Type

Features

1. 가스켓 배관형
2. 레버 교환 용이
3. 내경범위 : ø25~55
4. 작동압력 : 20~150kgf/cm²
5. 사용온도 : 0~60°C
6. 레버 조립 시 고정 상태 에서 볼트 체결
7. 레버는 옵션 사항임

1. Gasket manifold
2. Easy lever exchange
3. Piston Diameter : ø25~55
4. Operating Pressure : 20~150kgf/cm²
5. Operating Temperature : 0~60°C
6. When assembling the lever, the bolts should be fastened in a fixed state.
7. Lever is option item

› SDR - 25 22 G (① ② ③ ④) SDR - 25 22 GV (① ② ③ ④)

① R=Right, L=Left ② Piston Diameter (mm) ③ Total Stroke(mm)
④ G = Gasket / GV = Gasket + Valve Type

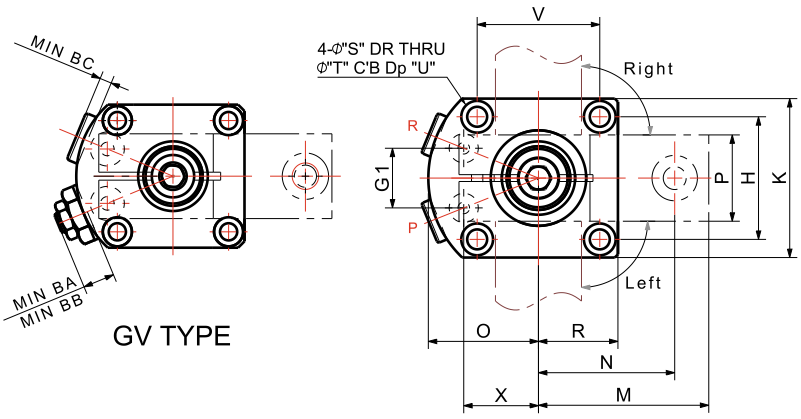

GV TYPE

P : Clamp
R : Unclamp

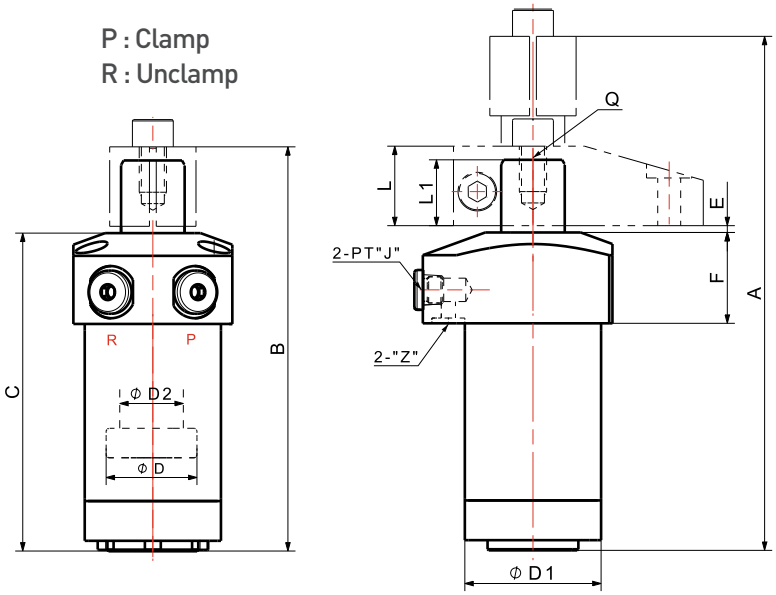

LEVER (OPTION)

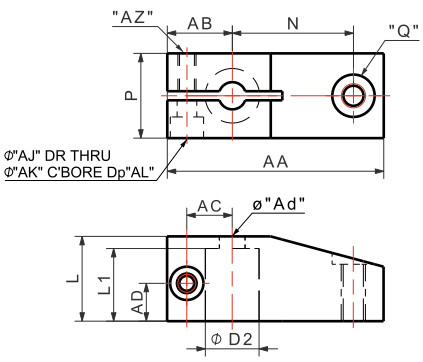

Dimensions

MODEL NO.		SDR/L- 2522G	SDR/L- 3030G	SDR/L- 4045G	SDR/L- 5555G
DIMENSIONS (mm)	A	152	188	223	280
	B	130	158	178	225
	C	99	123	140	182
	øD	25	30	40	55
	øD1	37	45.5	57	76
	øD2	18	22.4	28	35
	E	3	3	3	3
	F	30	35	40	45
	G1	20	23	31	35
	H	42	42	54	70
	J	PT 1/8	PT 1/4	PT 1/4	PT 3/8
	K	55	54	70	89
	L	28	32	35	40
	L1	24	27	29	34
	M	50	60	75	90
	N	40	50	60	70
	O	32	36.5	48.5	59
	P	28	32	38	60
	Q	M8 x 1.25P	M10 x 1.5P	M12 x 1.75P	M16 x 2.0P
	R	19	27	35	44.5
	S	6.5	6.5	9	11
	T	11	11	14	17
	U	15	15	20	25
	V	25	42	54	70
	X	23	25.5	35	43
	Z	P6	P6	P6	P10
	AA	71.5	88	110	130
	AB	21.5	28	35	40
	AC	15	19	24.5	28
	AD	12.5	14	15	17
	øAd	9	11	13	17
	AJ	6.5	9	11	11
	AK	11	14	17	17
	AL	7	9	11	20
	AZ	M6	M8	M12	M16
	BA	7.2	7.2	7.2	5.7
	BB	13.7	16.8	16.8	15.3
	BC	3.9	3.3	3.3	1.8

Pin Hole Rode

Top Flange

Bottom Flange

P/GP/GPV Type

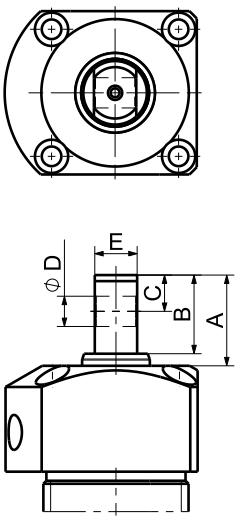

Top Flange Type

FP/FGP/FGPV/FGPT/FGPVT Type

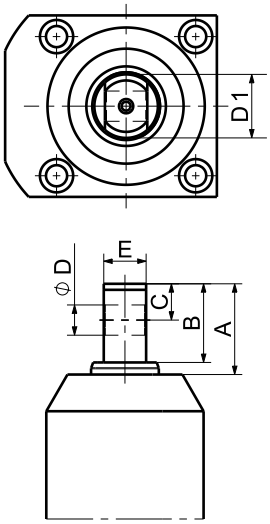

Bottom Flange Type

MODEL NO.	DIMENSIONS (mm)					
	A	B	C	øD	øD1	E
SDR/L-2522□P□	27	22.5	10	8	17	12
SDR/L-3030□P□	30	26	12	10	21	14
SDR/L-4045□P□	34	31	14	12	26.5	18
SDR/L-5555□P□	43	38	18	16	33	22

Lever (Option)

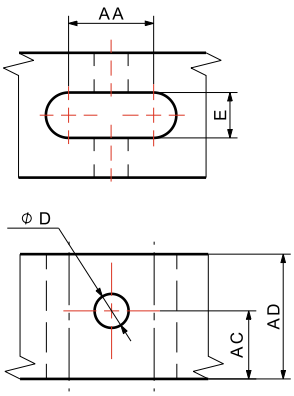

MODEL NO.	DIMENSIONS (mm)				
	AA	AC	øD	AD	E
SDR/L-2522□P□	17	11.5	8	20.5	12
SDR/L-3030□P□	21	13	10	24	14
SDR/L-4045□P□	26	16	12	29	18
SDR/L-5555□P□	33	19	16	36	22

클램프 능력 Clamp Capability

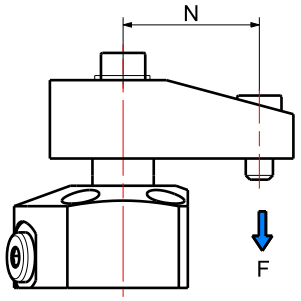

Standard Lever

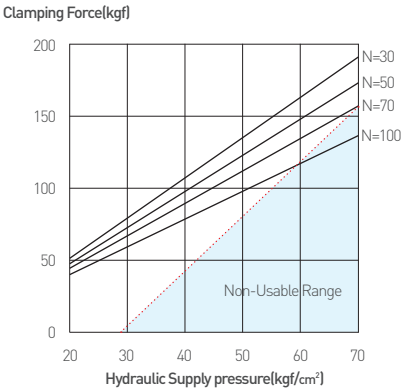

CSDR/L-2516□

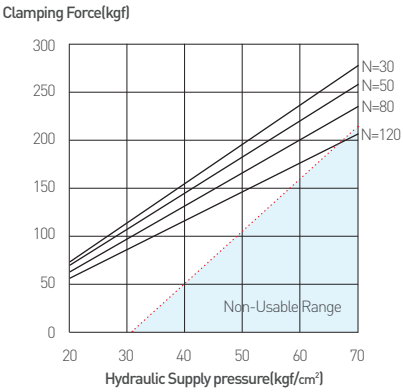

CSDR/L-3017□

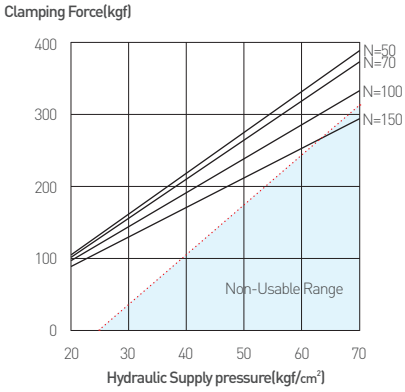

CSDR/L-3618□

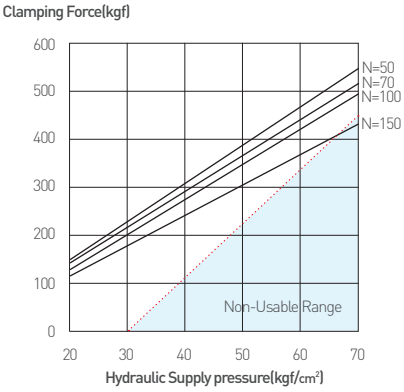

CSDR/L-4220□

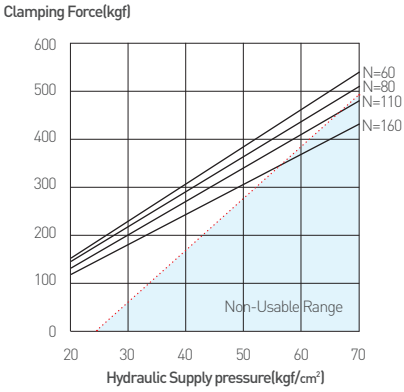

CSDR/L-5026□

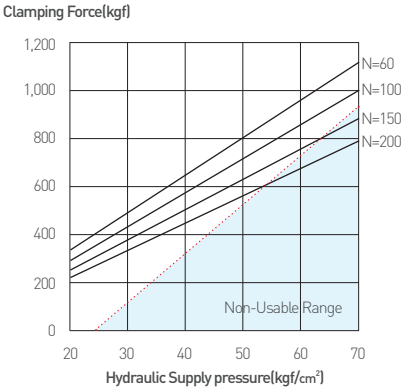

CSDR/L-6028□

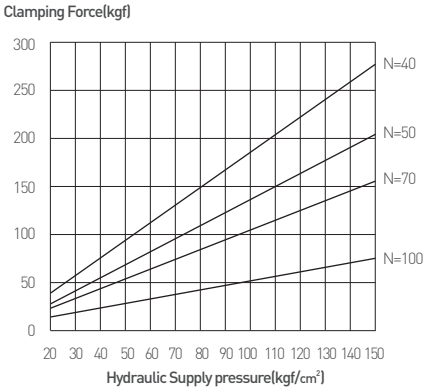

SDR/L-2522□

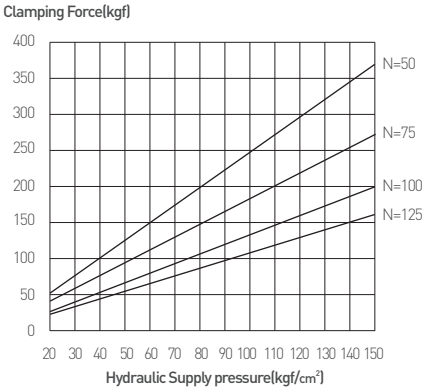

SDR/L-3030□

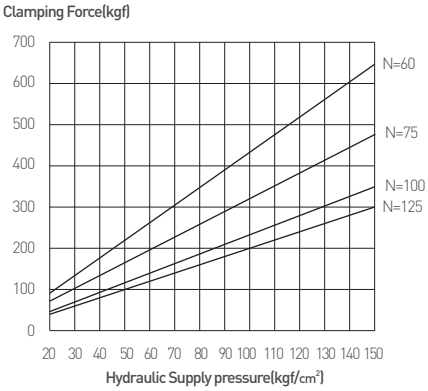

SDR/L-4045□

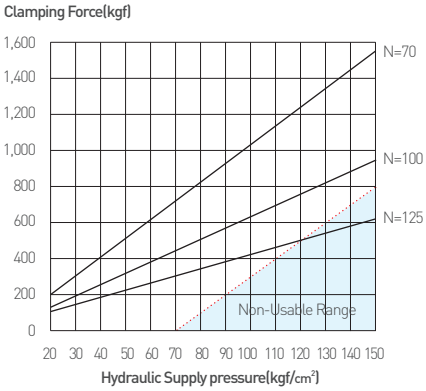

SDR/L-5555□

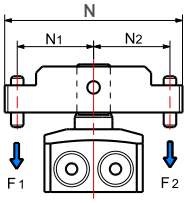

Balance Lever

Clamping Force Formula

CSDR/L-2516GP□

$F1 = \frac{N_1}{N} \times 3.14 \times P$

$F2 = \frac{N_1}{N} \times 3.14 \times P$

CSDR/L-3017GP□

$F1 = \frac{N_1}{N} \times 4.52 \times P$

$F2 = \frac{N_1}{N} \times 4.52 \times P$

CSDR/L-3618GP□

$F1 = \frac{N_1}{N} \times 6.37 \times P$

$F2 = \frac{N_1}{N} \times 6.37 \times P$

CSDR/L-4220GP□

$F1 = \frac{N_1}{N} \times 8.94 \times P$

$F2 = \frac{N_1}{N} \times 8.94 \times P$

CSDR/L-5026GP□

$F1 = \frac{N_1}{N} \times 12.56 \times P$

$F2 = \frac{N_1}{N} \times 12.56 \times P$

CSDR/L-6028GP□

$F1 = \frac{N_1}{N} \times 18.64 \times P$

$F2 = \frac{N_1}{N} \times 18.64 \times P$

권고사항 Recommendations

1. 보조 가이드 핀 설치
   포인트를 클램핑 하려면 보조 가이드 핀을 설치하십시오.

1. Assist Guide Pin Installation
   If you want to clamp at specific point, please install the assist guide pin.

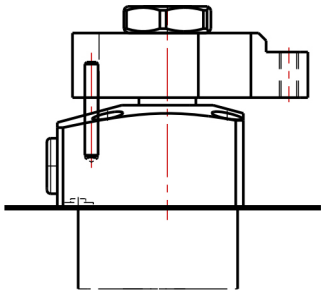

2. 작동속도 조절
   스윙클램프는 작동속도가 빠르면 관성 모멘트로 인하여 클램프 손상요인이 됨으로 작동속도를 적절하게 조절 하십시오. 클램핑 속도 뿐만 아니라 언클램핑 속도도 조절하십시오.

2. Operating Speed Control
   Please control both clamping and unclamping speed of swing clamp properly to prevent damage due to moment of inertia by fast operation.

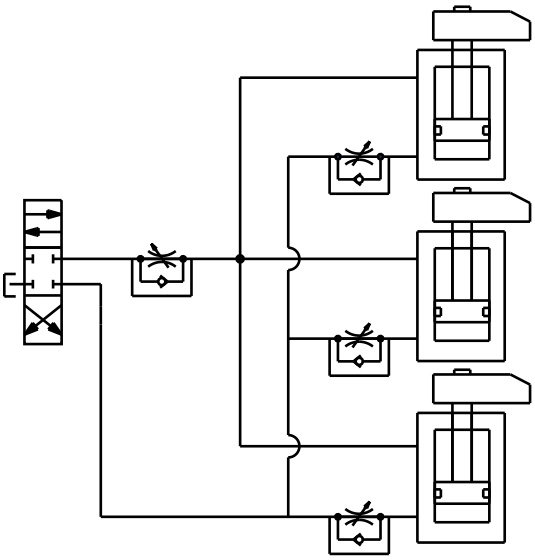

3. 레버 길이
   레버의 길이가 길거나 무거우면, 속도 조절과 보조가이드 핀 설치가 꼭 필요합니다.

3. Lever Length
   If lever is long or heavy, speed control valve and assist guide pin must be installed.

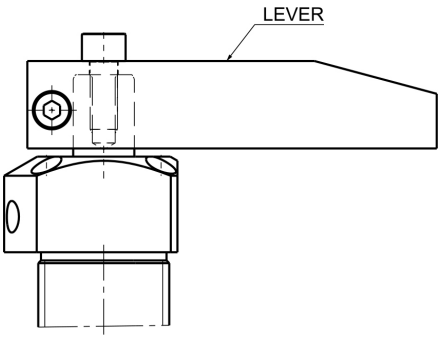

Swing Clamp Pneumatic (Air) Type

Piping Method

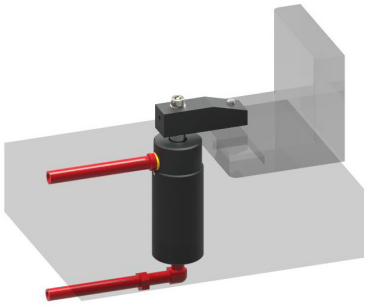

Model No.

SDR-1514A

SDR	–	15	14	A	–	30
1		2	3	4		5

1 Clamp Type
SDR = SWING RIGHT
SDL = SWING LEFT

2 Piston Diameter
ex) 15 = ø15

3 Pistion Rod Stroke
ex) 14 = 14mm

4 Type
› A = Pneumatic(Air)

5 Swing Angle
No sign = 90°
ex) 30 = 30°

Specification

MODEL NO.		SDR / L-1514A	SDR / L-2018A	SDR / L-2518A	SDR / L-3025A	SDR / L-4032A	SDR / L-5032A
Weight (kg)		0.18	0.32	0.50	0.92	1.51	2.07
Cylinder Force (kgf)	Max.	12.5	22.1	40.8	58.8	106.9	169.1
	Nom.	3.8	5.8	12.4	17.8	32.4	51.2
Piston Diameter (mm)		ø15	ø20	ø25	ø30	ø40	ø50
Effective Area (cm^2)		1.26	2.20	4.12	5.93	10.79	17.08
Stroke (mm)	Swing	7.0	9.0	8.0	15.0	17.0	17.0
	Straight	7.0	9.0	10.0	10.0	15.0	15.0
	Total	14.0	18.0	18.0	25.0	32.0	32.0
Operating Pressure Range		3 ~ 9.9 kgf/cm^2					
Operating Temperature Range		0 ~ 60 °C					

Swing Clamp Pneumatic Type

Features

1. 공압으로 작동되며 작은 고정력에 사용
2. 복동으로 공압에 의해 고정과 복귀된다.
3. 나사로 된 몸체를 이용한 손쉬운 설치
4. 내경범위 : ø15~50
5. 작동압력 : 3~9.9kgf/cm²
6. 사용온도 : 0~60°C
7. 레버 조립 시 고정 상태에서 볼트 체결
8. 레버는 옵션 사항임

1. Operated by pneumatic and used for low clamping force
2. Double-acting
3. Easy installation with threaded body
4. Piston Diameter : ø15~50
5. Operating Pressure : 3~9.9kgf/cm²
6. Operating Temperature : 0~60°C
7. When assembling the lever, the bolts should be fastened in a fixed state.
8. Lever is option item

Mounting Accessory(Page 117) :

MBS	MBR
MBS2012	MBR2010
MBS2512	MBR2510
MBS3212	MBR3210
MBS4012	MBR4010
MBS5012	MBR5011
MBS6015	MBR6011

› SDR - 15 14 A
① ② ③ ④

① R=Right, L=Left ② Piston Diameter (mm) ③ Total Stroke(mm)
④ Pneumatic Type

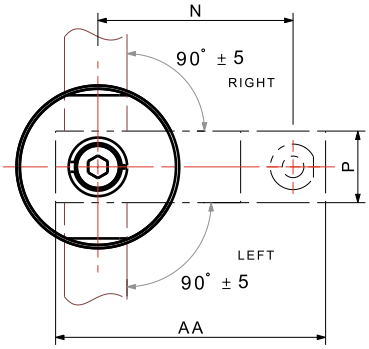

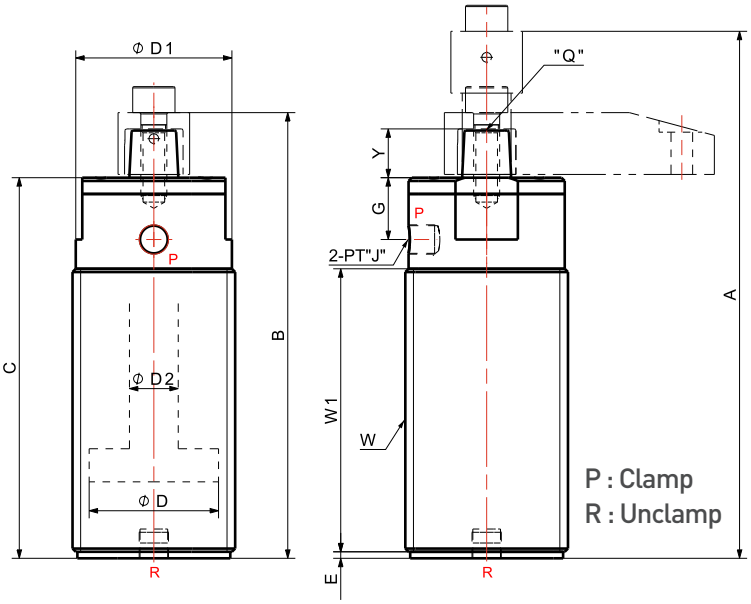

LEVER (OPTION)

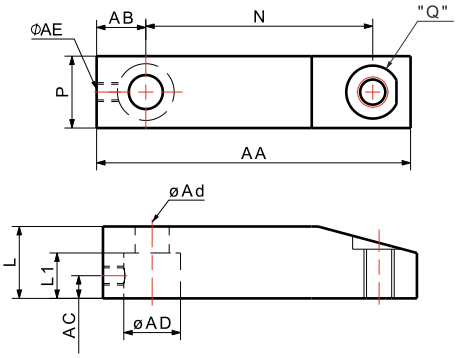

Dimensions

MODEL NO.		SDR/L-1514A	SDR/L-2018A	SDR/L-2518A	SDR/L-3025A	SDR/L-4032A	SDR/L-5032A
DIMENSIONS (mm)	A	97	114	120	150	169	173
	B	83	96	102	125	137	141
	C	70	79	85	105	117	120
	øD	15	20	25	30	40	50
	øD1	18.5	23	30	38	48	58
	øD2	8	10	10	12	15	18
	E	4	3	3	2	2	4
	G	11	11	12.5	12	19	17
	J	M5	M5	M5	PT 1/8	PT 1/8	PT 1/8
	L	12	16	16	19	19	19
	L1	8.5	12.5	12.5	12.5	14	14
	N	25	30	35	35	60	70
	P	14	16	16	19	22	25
	Q	M4	M5	M6	M6	M8	M8
	W	M20 x 1.0P	M25 x 1.5P	M32 x 1.5P	M40 x 1.5P	M50 x 1.5P	M60 x 1.5P
	W1	50.5	59	65	83	87	90
	Y	9.5	13.5	13.5	13.5	15	16
	AA	38.5	45	55	55	83	95
	AB	8.5	10	12	13	13	15
	AC	7	10	10	10	11	6
	øAd	4.5	5.5	6	7	9	9
	øAD	11	13	13	15	18	21
	øAE	2	3	3	3	3	3

Block Clamp Applications

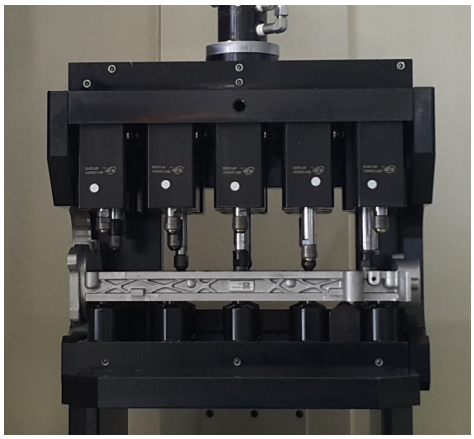

Block Clamp Types

Vertical Push/Pull type

Vertical Push/Pull Gasket type

Vertical Double Rod type

Vertical Push type

Horizontal Push/Pull type

Horizotal Push/Pull Gasket type

Horizontal Double Rod type

Horizontal Push type

Block Clamp Introduction

블럭 클램프는 일반 유압실린더와 비교하면 80mm가 짧습니다. 심플하고 컴팩트한 디자인은 좁은 공간에 설치하기 쉽습니다.
케이제이에프는 다양한 사이즈의 블럭 클램프를 구비하고 있습니다.

Block clamp is shorter than a normal hydraulic cylinder by 80 mm.
It is simple and compact, and easy to install in a crawlspace. KJF provides various sizes of block clamps.

Mounting Method

Vertical type

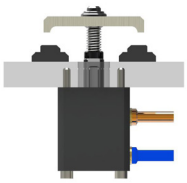

Released state

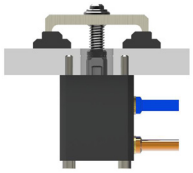

Locked state

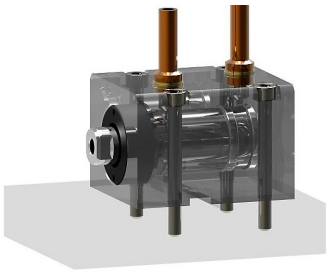

Horizontal type

Released state

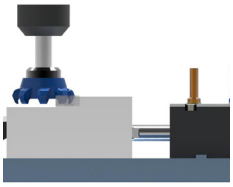

Locked state

규격품 외 변형제품
Change of design

카다로그 외 SIZE Size besides catalogue
- Stroke 5mm, 35mm, 75mm, 100mm, 125mm 등
- Stroke 5mm, 35mm, 75mm, 100mm, 125mm etc.

- 회전 방지 및 밸브 장착 가능.
- Rotation prevention and installing valve are possible.

Port의 위치를 변경하고자 할 때 Changing Port location

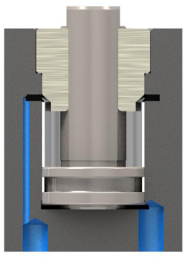

Gasket Type을 원할 경우 Case of Gasket type

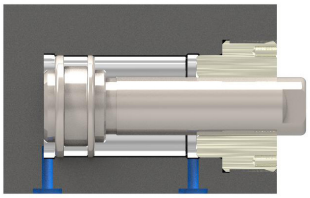

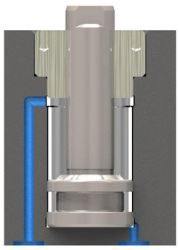

Piston Rod를 변경하고자 할 때 Changing Piston rod

Block Clamp Vertical Type

Piping Method

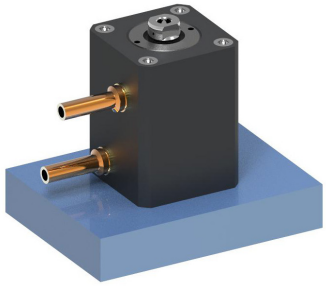

Push / Pull Type

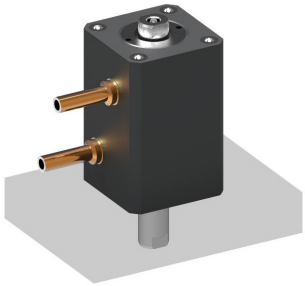

Double Rod Type

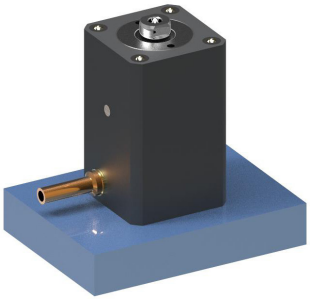

Push Type

Manifold Method

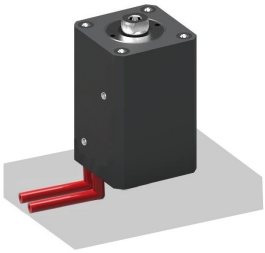

Gasket Type

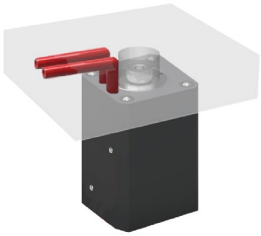

Gasket Upper Type

Rod Shape

Threaded

Pin Hole

Model No.

BDV-2815D

BDV	–	28	15	D
1		2	3	4

1 Clamp Type

BDV = Block Clamp, Double(Push/Pull)-acting, Vertical type
BPV = Block Clamp, Single(Push)-acting , Vertical type

2 Piston Diameter

ex) 28 = ø28

3 Pistion Rod Stroke

ex) 15 = 15mm

4 Type

- No Sign = Standard
- C = Threaded Rod
- P = Pin Hole Rod
- D = Double Rod
- DC = Threaded Double Rod
- G = Gasket
- GU = Gasket Upper
- GC = Gasket + Threaded Rod
- GCU= Gasket Upper + Threaded Rod
- GP = Gasket + Pin Hole Rod
- GPU = Gasket Upper + Pin Hole Rod

Specification

Push/Pull Type

* C/P, G/GU, GC/GCU, GP/GPU type도 아래표에 적용됩니다.
* C/P, G/GU, GC/GCU and GP/GPU types are applied to below specification.

MODEL NO.	Weight (kg)	Max. Clamping Force(kgf)		Effective Area (cm^2)		Oil Capacity (cm^3)		Operating Pressure Range	Operating Temperature Range
		Push	Pull	Push	Pull	Push	Pull		
BDV-2010	0.69	790	500	3.1	2.0	3.1	2.0	15~250 kgf/cm^2	0~60°C
BDV-2015	0.76					4.7	3.0		
BDV-2020	0.82					6.3	4.0		
BDV-2025	0.88					7.9	5.0		
BDV-2030	0.95					9.4	6.0		
BDV-2510	0.94	1,230	840	4.9	3.4	4.9	3.4		
BDV-2515	1.02					7.4	5.1		
BDV-2520	1.09					9.8	6.7		
BDV-2525	1.18					12.3	8.4		
BDV-2530	1.26					14.7	10.1		
BDV-2815	1.5	1,520	1,020	6.1	4.1	9.3	6.2		
BDV-2825	1.7					15.4	10.4		
BDV-2850	2.3					30.8	20.7		
BDV-3215	1.8	2,000	1,370	8.0	5.5	12.0	8.2		
BDV-3225	2.1					20.1	13.7		
BDV-3250	2.8					40.2	27.5		
BDV-4015	2.3	3,120	2,150	12.5	8.6	18.9	12.9		
BDV-4025	2.5					31.4	21.6		
BDV-4050	3.3					62.8	43.1		

MODEL NO.	Weight (kg)	Max. Clamping Force(kgf)		Effective Area (cm^2)		Oil Capacity (cm^3)		Operating Pressure Range	Operating Temperature Range
		Push	Pull	Push	Pull	Push	Pull		
BDV-5015	3.3	4,950	3,400	19.6	13.4	49.5	20.2	15~250 kgf/cm^2	0~60°C
BDV-5025	3.6					49.1	33.7		
BDV-5050	4.5					98.2	67.4		
BDV-6315	4.7	7,770	5,320	31.1	21.3	46.8	31.8		
BDV-6325	5.2					78.0	53.2		
BDV-6350	6.3					155.9	106.4		
BDV-8015	10.5	12,550	8,600	50.2	34.4	75.4	51.5		
BDV-8025	11.5					125.7	85.9		
BDV-8050	14.3					251.4	171.8		
BDV-10050	15.5	19,630	13,470	78.5	53.9	392.5	269.5		
BDV-10075	17.8					588.8	404.3		
BDV-100100	20.1					785.0	539.0		
BDV-12050	25.2	30,670	22,380	122.7	89.5	613.5	447.5		
BDV-12075	28.3					920.3	671.3		
BDV-120100	31.5					1,277.0	895.0		
BDV-15050	37.1	44,170	34,550	176.7	138.2	883.5	691.0		
BDV-15075	41.6					1,325.3	1,036.5		
BDV-150100	46.1					1,767.0	1,382.0		

Double Rod Type

* DC type도 아래표에 적용됩니다.
* DC type is applied to below specification.

MODEL NO.	Max. Clamping Force (kgf)		Effective Area (cm^2)		Oil Capacity (cm^3)		Weight (kg)	Operating Pressure Range	Operating Temperature Range
	Push	Pull	Push	Pull	Push	Pull			
BDV-2815D	1,020		4.1		6.2		1.7	15~250 kgf/cm^2	0~60°C
BDV-2825D					10.4		1.9		
BDV-2850D					20.7		2.7		
BDV-3215D	1,370		5.5		8.2		2.0		
BDV-3225D					13.7		2.5		
BDV-3250D					27.5		3.2		
BDV-4015D	2,150		8.6		12.9		2.7		
BDV-4025D					21.6		2.9		
BDV-4050D					43.1		3.9		
BDV-5015D	3,400		13.6		20.2		3.9		
BDV-5025D					33.7		4.2		
BDV-5050D					67.4		5.3		
BDV-6315D	5,320		21.3		31.8		5.7		
BDV-6325D					53.2		6.2		
BDV-6350D					106.4		7.6		
BDV-8015D	8,600		34.4		51.5		12.5		
BDV-8025D					85.9		12.6		
BDV-8050D					171.8		15.7		

Push Type

MODEL NO.	Max. Clamping Force (kgf)	Effective Area (cm^2)	Oil Capacity (cm^3)	Weight (kg)	Operating Pressure Range	Operating Temperature Range
	Push	Push	Push			
BPV-2815	1,520	6.1	9.3	1.4	15~250 kgf/cm^2	0~60°C
BPV-2825			15.4	1.9		
BPV-3215	2,000	8.0	12.0	1.9		
BPV-3225			20.1	2.4		
BPV-4015	3,120	12.5	18.9	2.4		
BPV-4025			31.4	2.9		
BPV-5015	4,950	19.8	29.5	3.3		
BPV-5025			49.1	4.1		
BPV-6315	7,770	31.1	46.8	4.9		
BPV-6325			78.0	5.4		

Block Clamp Push/Pull Vertical Type

Features

1. 복동으로 작동
2. 다양한 사이즈
3. 설치 용이
4. 작동압력 : 15~250kgf/cm²
5. 피스톤 속도 : 8~100mm/s
6. 사용온도 : 0~60°C

1. Double-acting
2. Various sizes
3. Easy installation
4. Operating Pressure : 15~250kgf/cm²
5. Piston Speed : 8~100mm/s
6. Operating Temperature : 0~60°C

› BDV - 20 10 (① ② ③) BDV - 20 10 C (① ② ③ ④) BDV - 20 10 P (① ② ③ ④)

① Vertical Type ② Piston Diameter(mm) ③ Stroke(mm)
④ Threaded Rod, Pin Hole Rod

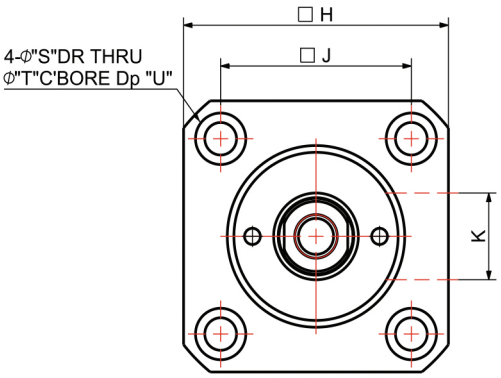

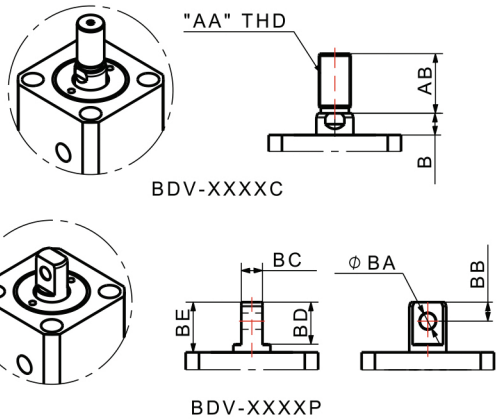

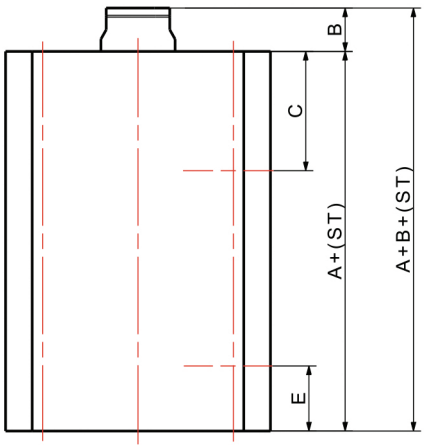

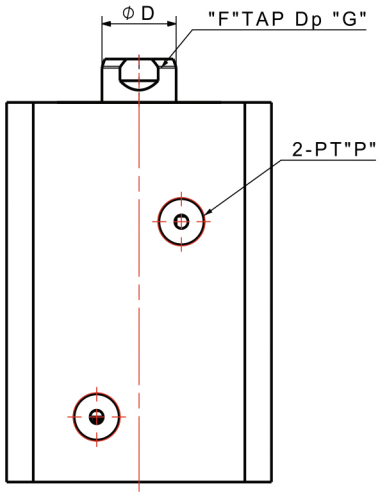

Dimensions

MODEL NO.	DIMENSIONS (mm)																					
	A	B	C	øD	E	F	G	H	J	K	P	S	T	U	AA	AB	BA	BB	BC	BD	BE	Piston dia.
BDV-20xx	43	8	21	12	12	M8 x 1.25P	16	44	30	0	1/8	5.5	9.5	7	M10 x 1.25P	20	ø6	7	8	15.5	18.5	ø20
BDV-25xx	45	8	22	14	12	M8 x 1.25P	16	50	36	16	1/8	5.5	9.5	5.5	M12 x 1.25P	22	ø6	7	8	15.5	18.5	ø25
BDV-28xx	50	8	23	16	12	M8 x 1.25P	12	56	42	16	1/8	5.5	9.5	5.5	M14 x 1.5P	25	ø8	8	12	20.5	23.5	ø28
BDV-32xx	54	10	26	18	12	M10 x 1.5P	15	62	47	20	1/4	6.6	11	7	M16 x 1.5P	25	ø8	9	14	21.5	24.5	ø32
BDV-40xx	55	10	27	22.4	12	M12 x 1.75P	20	70	52	20	1/4	9	14	9	M20 x 1.5P	30	ø10	11	16	25.5	28.5	ø40
BDV-50xx	60	10	29	28	13	M16 x 2.0P	25	80	58	20	1/4	11	17.5	11	M24 x 1.5P	35	ø12	13	20	29.5	32.5	ø50
BDV-63xx	67	13	31.5	35.5	15	M20 x 2.5P	33	94	69	20	1/4	14	20	13	M30 x 1.5P	45	ø16	17	25	35.5	38.5	ø63
BDV-80xx	78	17	33	45	20	M24 x 3.0P	33	114	86	30	3/8	16	23	16	M39 x 1.5P	60	ø18	20	32	42.5	45.5	ø80
BDV-100xx	88	20	41.5	56	22.5	M36 x 4.0P	40	136	102	46	3/8	20	29	20								ø100
BDV-125xx	102	25	43	65	25	M42 x 4.5P	45	163	124	52	1/2	21	31	22								ø125
BDV-150xx	105	25	43	70	26	M48 x 5.0P	50	198	148	52	1/2	26	38	26								ø150

G Type

GU Type

* Threaded Rod와 Pin Hole Rod Type 가능합니다.
* Threaded Rod and Pin Hole Rod Type are available.

Block Clamp Push/Pull Vertical Gasket Type

Features

1. 복동으로 작동
2. 가스켓 타입 포트
3. 설치 용이
4. 작동압력 : 15~250kgf/cm^2
5. 피스톤 속도 : 8~100mm/s
6. 사용온도 : 0~60°C

1. Double-acting
2. Gasket type ports
3. Easy installation
4. Operating Pressure : 15~250kgf/cm^2
5. Piston Speed : 8~100mm/s
6. Operating Temperature : 0~60°C

› BDV - 20 10 G (① ② ③ ④) BDV - 20 10 GU (① ② ③ ④) BDV - 20 10 GC (① ② ③ ④) BDV - 20 10 GP (① ② ③ ④)

① Vertical Type ② Piston Diameter(mm) ③ Stroke(mm)
④ Gasket, Gasket Upper, Gasket + Threaded Rod, Gasket Upper + Pin Hole Rod

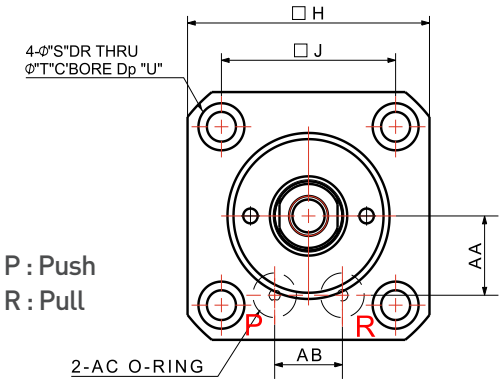

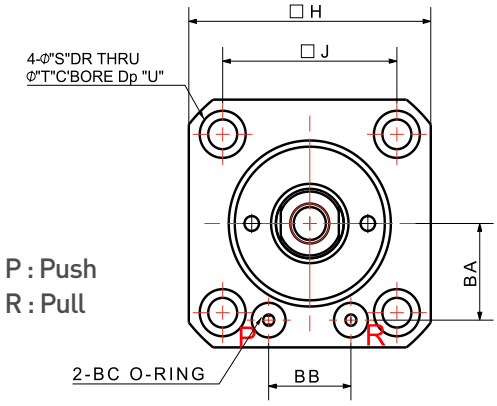

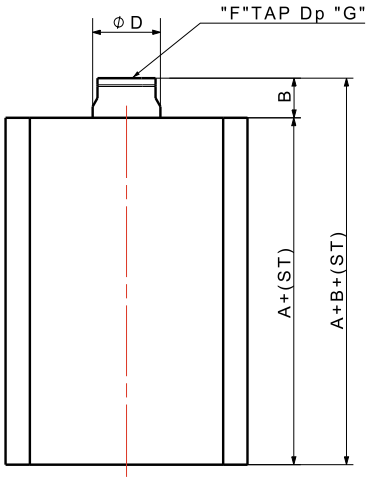

G TYPE

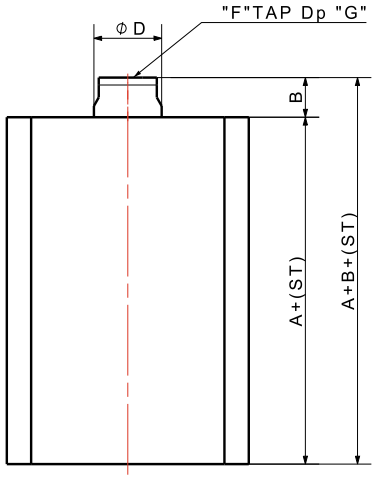

GU TYPE

Dimensions

MODEL NO.	DIMENSIONS (mm)																
	A	B	øD	F	G	H	J	S	T	U	AA	AB	AC	BA	BB	BC	Piston dia.
BDV-20xxGx	43	8	12	M8 x 1.25P	16	44	30	5.5	9.5	7	13	10	P5	16.5	11	P4	ø20
BDV-25xxGx	45	8	14	M8 x 1.25P	16	50	36	5.5	9.5	5.5	16	14	P6	19.5	17	P4	ø25
BDV-28xxGx	50	8	16	M8 x 1.25P	12	56	42	5.5	9.5	5.5	17	16	P7	21	20	P5	ø28
BDV-32xxGx	54	10	18	M10 x 1.5P	15	62	47	6.6	11	7	20	20	P8	24	24	P6	ø32
BDV-40xxGx	55	10	22.4	M12 x 1.75P	20	70	52	9	14	9	24	20	P9	27.5	25	P6	ø40
BDV-50xxGx	60	10	28	M16 x 2.0P	25	80	58	11	17.5	11	28	20	P9	31.5	27	P6	ø50

Block Clamp Push/Pull Double Rod Vertical Type

Features

1. 양로드형
2. 다양한 사이즈
3. 복동으로 작동
4. 작동압력 : 15~250kgf/cm²
5. 피스톤 속도 : 8~100mm/s
6. 사용온도 : 0~60°C

1. Double rod type
2. Various sizes
3. Double-acting
4. Operating Pressure : 15~250kgf/cm²
5. Piston Speed : 8~100mm/s
6. Operating Temperature : 0~60°C

› BDV - 28 15 D BDV - 28 15 DC
① ② ③ ④ ① ② ③ ④

① Vertical Type ② Piston Diameter(mm) ③ Stroke(mm)
④ Double Rod Type, Double + Threaded Rod

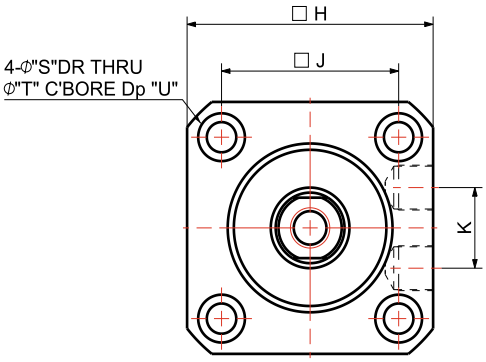

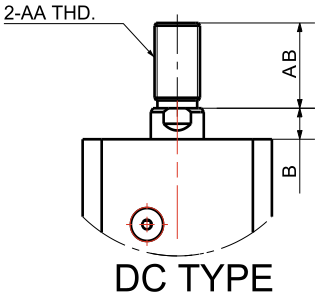

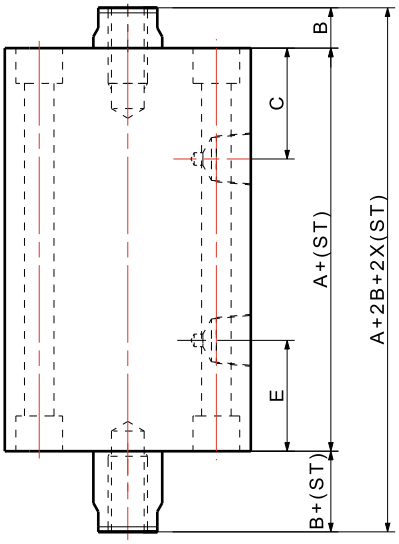

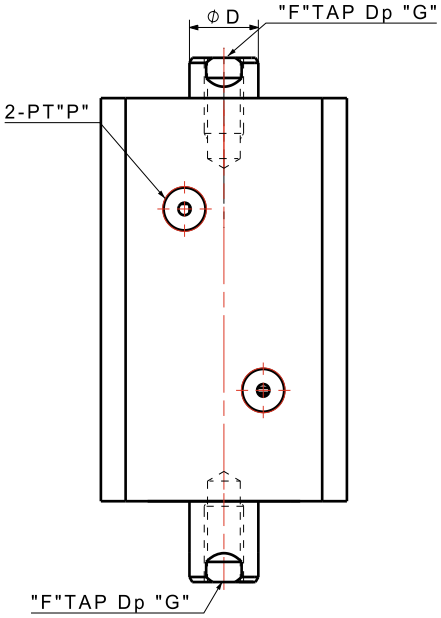

Dimensions

MODEL NO.	DIMENSIONS (mm)																	
	A	B	C	øD	E	F	G	H	J	K	P	øS	øT	U	AA	AB	U	Piston dia.
BDV-28xxD	61	8	23	16	12	M8 x 1.25P	12	56	42	16	1/8	5.5	9.5	5.5	M14 x 1.5P	25	25	ø28
BDV-32xxD	68	10	26	18	12	M10 x 1.5P	15	62	47	20	1/4	5.6	11	7	M16 x 1.5P	25	25	ø32
BDV-40xxD	70	10	27	22.4	12	M12x1.75P	20	70	52	20	1/4	9	14	9	M20 x 1.5P	30	30	ø40
BDV-50xxD	75	10	29	28	13	M16 x 2.0P	25	80	58	20	1/4	11	17.5	11	M24 x 1.5P	35	35	ø50
BDV-63xxD	82	13	31.5	35.5	15	M20 x 2.5P	33	94	69	20	1/4	14	20	13	M30 x 1.5P	45	45	ø63
BDV-80xxD	92	17	33	45	20	M24 x 3.0P	33	114	86	30	3/8	16	23	16	M39 x 1.5P	60	60	ø80

Block Clamp Push Vertical Type

Features

1. 단동으로 작동
2. 스프링 복귀방식
3. 설치 용이
4. 작동압력 : 15~250kgf/cm^2
5. 피스톤 속도 : 8~100mm/s
6. 사용온도 : 0~60°C
7. 유로를 가능한 크게 하시오.

1. Single-acting
2. Spring return method
3. Easy installation
4. Operating Pressure : 15~250kgf/cm^2
5. Piston Speed : 8~100mm/s
6. Operating Temperature : 0~60°C
7. Make piping size as big as possible

› BPV - 28 15
① ② ③

① Vertical Type ② Piston Diameter(mm) ③ Stroke(mm)

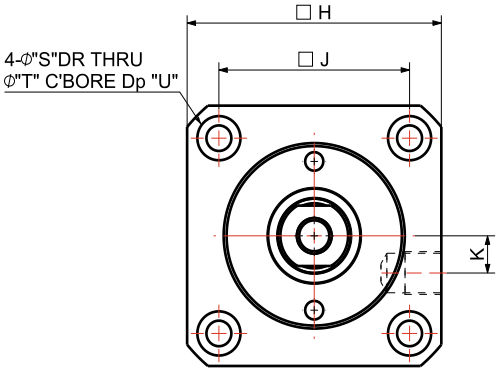

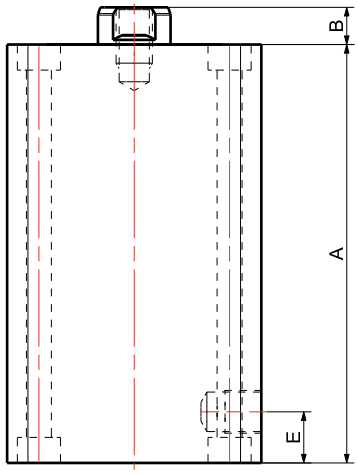

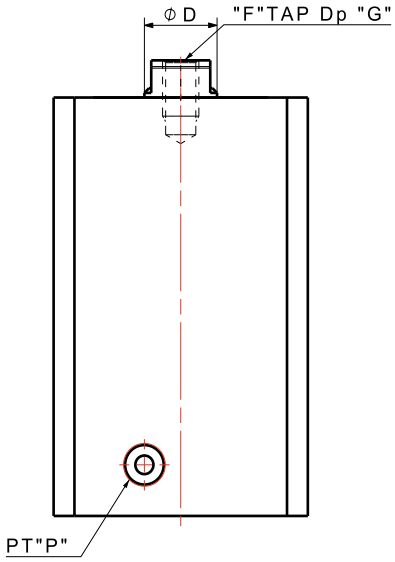

Dimensions

MODEL NO.	DIMENSIONS (mm)														
	A		B	øD	E	F	G	H	J	K	P	øS	øT	U	Piston dia.
	ST15	ST25													
BPV-28xx	72	90	8	16	11	M8 x P1.25	12	56	42	8	1/8	ø5.5	ø9.5	5.5	ø28
BPV-32xx	72	90	10	18	12.5	M10 x P1.5	15	62	47	10	1/4	ø6.6	ø11	6.5	ø32
BPV-40xx	73	93	10	22.4	12	M12 x P1.75	20	70	52	10	1/4	ø9	ø14	9	ø40
BPV-50xx	78	98	10	28	13	M16 x P2.0	25	80	58	10	1/4	ø11	ø18	12	ø50
BPV-63xx	86	106	13	35.5	15	M20 x P2.5	33	94	69	10	1/4	ø14	ø20	13	ø63

Block Clamp Horizontal Type

Piping Method

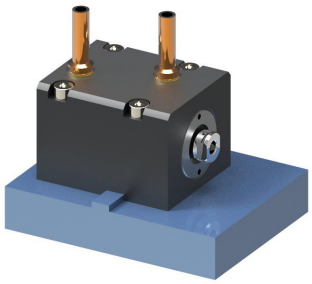

Push/Pull Type

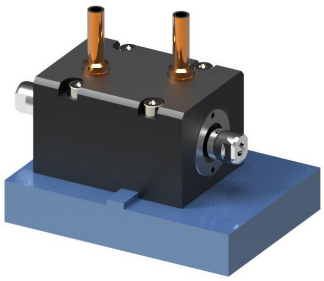

Double Rod Type

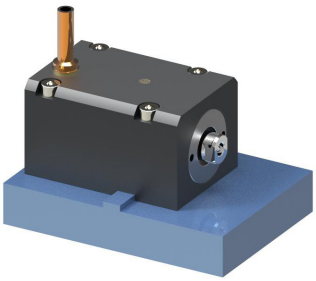

PushType

Manifold Method

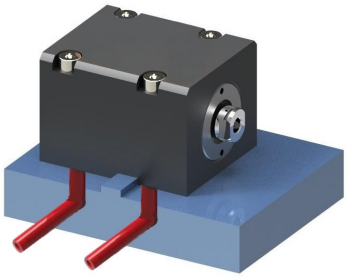

Gasket Type

Rod Shape

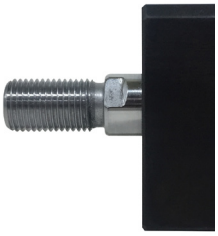

Threaded

Pin Hole

Model No.

BDH-2815D

BDH	–	28	15	D
1		2	3	4

1 Clamp Type

BDH = Block Clamp, Double(Push/Pull)-acting, Horizontal type
BPH = Block Clamp, Single(Push)-acting , Horizontal type

2 Piston Diameter

ex) 28 = ø28

3 Pistion Rod Stroke

ex) 15 = 15mm

4 Type

- No Sign = Standard
- C = Threaded Rod
- P = Pin Hole Rod
- D = Double Rod
- DC = Threaded Double Rod
- G = Gasket
- GC = Gasket + Threaded Rod
- GP = Gasket + Pin Hole Rod

Specification

Push/Pull Type

* C/P, G/GC/ GP type도 아래표에 적용됩니다.
* C/P and G/GC/GP types are applied to below specification.

MODEL NO.	Weight (kg)	Max. Clamping Force(kgf)		Effective Area (cm^2)		Oil Capacity (cm^3)		Operating Pressure Range	Operating Temperature Range
		Push	Pull	Push	Pull	Push	Pull		
BDH-2010	0.69	790	500	3.1	2.0	3.1	2.0	15~250 kgf/cm^2	0~60°C
BDH-2015	0.76					4.7	3.0		
BDH-2020	0.82					6.3	4.0		
BDH-2025	0.88					7.9	5.0		
BDH-2030	0.95					9.4	6.0		
BDH-2510	0.94	1,230	840	4.9	3.4	4.9	3.4		
BDH-2515	1.02					7.4	5.1		
BDH-2520	1.09					9.8	6.7		
BDH-2525	1.18					12.3	8.4		
BDH-2530	1.26					14.7	10.1		
BDH-2815	1.5	1,520	1,020	6.1	4.1	9.3	6.2		
BDH-2825	1.7					15.4	10.4		
BDH-2850	2.3					30.8	20.7		
BDH-3215	1.8	2,000	1,370	8.0	5.5	12.0	8.2		
BDH-3225	2.1					20.1	13.7		
BDH-3250	2.8					40.2	27.5		
BDH-4015	2.3	3,120	2,150	12.5	8.6	18.9	12.9		
BDH-4025	2.5					31.4	21.6		
BDH-4050	3.3					62.8	43.1		

MODEL NO.	Weight (kg)	Max. Clamping Force(kgf)		Effective Area (cm^2)		Oil Capacity (cm^3)		Operating Pressure Range	Operating Temperature Range
		Push	Pull	Push	Pull	Push	Pull		
BDH-5015	3.3	4,950	3,400	19.6	13.4	49.5	20.2	15~250 kgf/cm^2	0~60°C
BDH-5025	3.6					49.1	33.7		
BDH-5050	4.5					98.2	67.4		
BDH-6315	4.7	7,770	5,320	31.1	21.3	46.8	31.8		
BDH-6325	5.2					78.0	53.2		
BDH-6350	6.3					155.9	106.4		
BDH-8015	10.5	12,550	8,600	50.2	34.4	75.4	51.5		
BDH-8025	11.5					125.7	85.9		
BDH-8050	14.3					251.4	171.8		
BDH-10050	19.3	19,630	13,470	78.5	53.9	392.5	269.5		
BDH-10075	22.6					588.8	404.3		
BDH-100100	25.8					785.0	539.0		
BDH-12050	31.7	30,670	22,380	122.7	89.5	613.5	447.5		
BDH-12075	36.2					920.3	671.3		
BDH-120100	40.7					1,227.0	895.0		
BDH-15050	46.4	44,170	34,550	176.7	138.2	883.5	691.0		
BDH-15075	52.8					1.325.3	1,036.5		
BDH-150100	59.3					1,767.0	1,382.0		

Double Rod Type

* DC type도 아래표에 적용됩니다.
* DC type is applied to below specification.

MODEL NO.	Max. Clamping Force (kgf)		Effective Area (cm^2)		Oil Capacity (cm^3)		Weight (kg)	Operating Pressure Range	Operating Temperature Range
	Push	Pull	Push	Pull	Push	Pull			
BDH-2815D	1,020		4.1		6.2		1.8	15~250 kgf/cm^2	0~60°C
BDH-2825D					10.4		2.0		
BDH-2850D					20.7		2.7		
BDH-3215D	1,370		5.5		8.2		2.0		
BDH-3225D					13.7		2.7		
BDH-3250D					27.5		3.5		
BDH-4015D	2,150		8.6		12.9		2.7		
BDH-4025D					21.6		3.0		
BDH-4050D					43.1		4.1		
BDH-5015D	3,400		13.6		20.2		4.0		
BDH-5025D					33.7		4.6		
BDH-5050D					67.4		5.6		
BDH-6315D	5,320		21.3		31.8		6.5		
BDH-6325D					53.2		7.3		
BDH-6350D					106.4		9.0		
BDH-8015D	8,600		34.4		51.5		12.7		
BDH-8025D					85.9		13.8		
BDH-8050D					171.8		15.6		

Push Type

MODEL NO.	Max. Clamping Force (kgf)	Effective Area (cm^2)	Oil Capacity (cm^3)	Weight (kg)	Operating Pressure Range	Operating Temperature Range
	Push	Push	Push			
BPH-2815	1,520	6.1	9.3	1.7	15~250 kgf/cm^2	0~60°C
BPH-2825			15.4	1.9		
BPH-3215	2,000	8.0	12.0	1.9		
BPH-3225			20.1	2.4		
BPH-4015	3,120	12.5	18.9	2.5		
BPH-4025			31.4	3.0		
BPH-5015	4,950	19.8	29.5	3.6		
BPH-5025			49.1	5.0		
BPH-6315	7,770	31.1	46.8	5.7		
BPH-6325			78.0	7.0		

Block Clamp Push/Pull Horizontal Type

Features

1. 복동으로 작동
2. 다양한 사이즈
3. 설치 용이
4. 작동압력 : 15~250kgf/cm²
5. 피스톤 속도 : 8~100mm/s
6. 사용온도 : 0~60°C

1. Double-acting
2. Various sizes
3. Easy installation
4. Operating Pressure : 15~250kgf/cm²
5. Piston Speed : 8~100mm/s
6. Operating Temperature : 0~60°C

› BDH - 20 10 (① ② ③) BDH - 20 10 C (① ② ③ ④) BDH - 20 10 P (① ② ③ ④)

① Horizontal Type ② Piston Diameter(mm) ③ Stroke(mm)
④ Threaded Rod, Pin Hole Rod

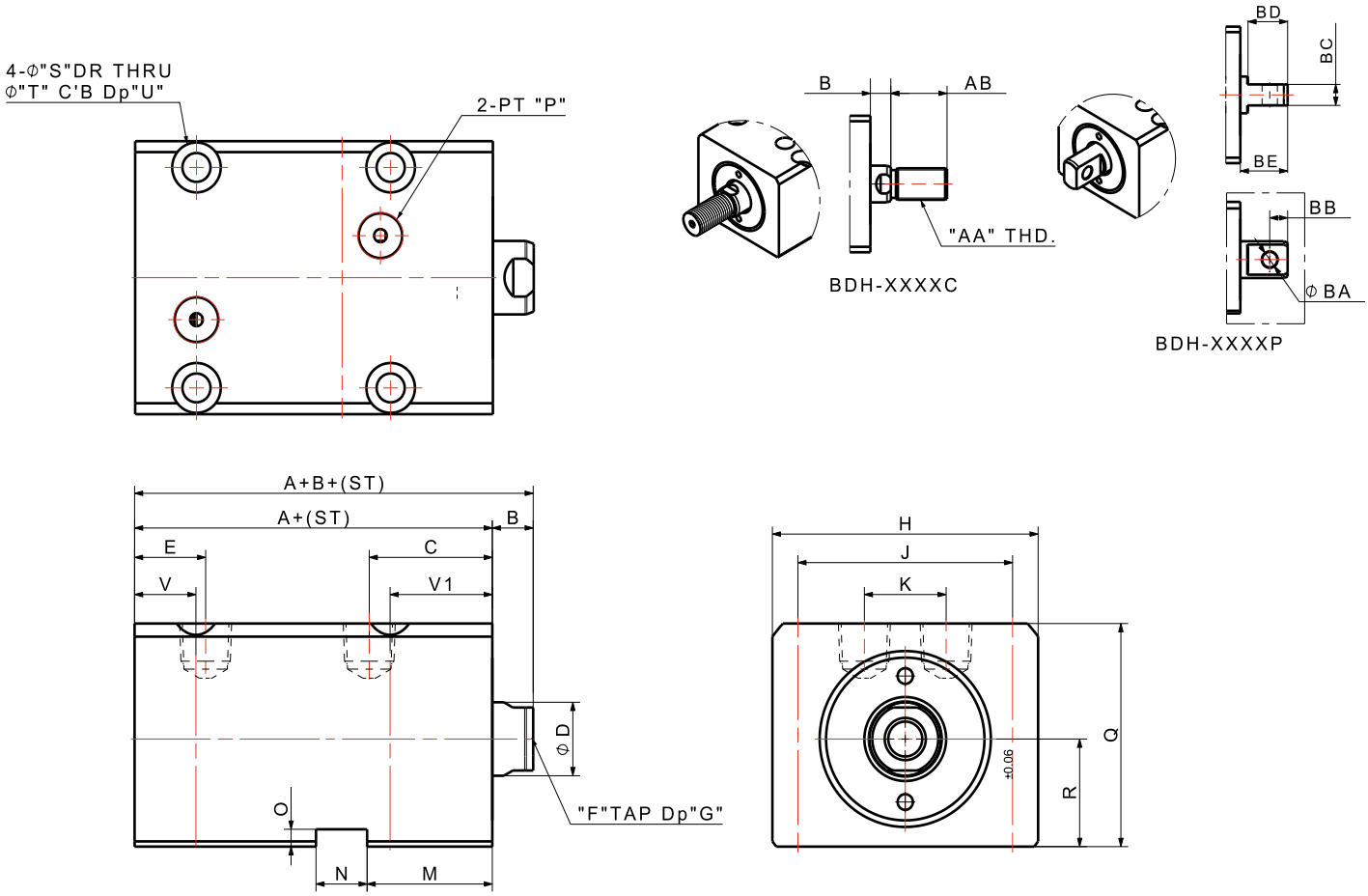

Dimensions

MODEL NO.	DIMENSIONS (mm)																											
	A	B	C	øD	E	F	G	H	J	K	M	N	O	P	Q	R	øS	øT	U	V	V1	AA	AB	BA	BB	BC	BD	BE	Piston dia.
BDH-20xx	43	8	21	12	12	M8 x 1.25P	16	45	35	0	22.5	10	3.3	1/8	40	18	5.5	9.5	6	12	18	M10 x 1.25P	20	ø6	7	8	15.5	18.5	ø20
BDH-25xx	45	8	22	14	12	M8 x 1.25P	16	52	42	16	24.5	10	3.3	1/8	43	21	5.5	9.5	6	12	20	M12 x 1.25P	22	ø6	7	8	15.5	18.5	ø25
BDH-28xx	50	8	23	16	12	M8 x 1.25P	12	62	50	16	25	10	3.3	1/8	52	24	6.6	11	6.5	12	20	M14 x 1.5P	25	ø8	8	12	20.5	23.5	ø28
BDH-32xx	54	10	26	18	12	M10 x 1.5P	15	70	56	20	28	12	3.3	1/4	56	25	9	14	9	10	20	M16 x 1.5P	25	ø8	9	14	21.5	24.5	ø32
BDH-40xx	55	10	27	22.4	12	M12 x 1.75P	20	80	62	20	28	12	3.3	1/4	64	29	11	17.5	11	12	20	M20 x 1.5P	30	ø10	11	16	25.5	28.5	ø40
BDH-50xx	60	10	29	28	13	M16 x 2.0P	25	94	74	20	29	14	3.8	1/4	74	31	14	20	13	13	20	M24 x 1.5P	35	ø12	13	20	29.5	32.5	ø50
BDH-63xx	67	13	31.5	35.5	15	M20 x 2.5P	33	114	90	20	31	16	4.3	1/4	89	42	16	23	16	15	20	M30 x 1.5P	45	ø16	17	25	35.5	38.5	ø63
BDH-80xx	78	17	33	45	20	M24 x 3.0P	33	142	114	30	32	20	4.9	3/8	109	52	18	26	18	20	20	M39 x 1.5P	60	ø18	20	32	42.5	45.5	ø80
BDH-100xx	88	20	42	56	23	M36 x 4.0P	40	164	134	46	40	20	5	3/8	133	65	20	31	20	23	26								ø100
BDH-125xx	102	25	43	65	25	M42 x 4.5P	45	196	164	52	40	20	5	1/2	163	80	21	31	22	23	26								ø125
BDH-150xx	105	25	43	70	26	M48 x 5.0P	50	236	198	52	50	20	5	1/2	198	95	26	36	26	30	30								ø150

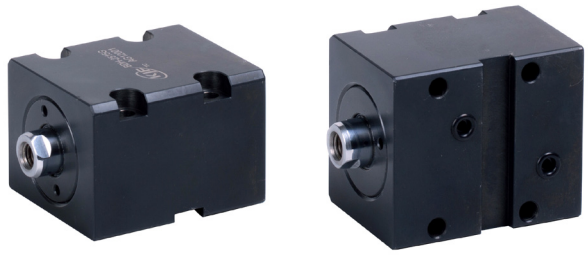

* Threaded Rod와 Pin Hole Rod Type 가능합니다.
* Threaded Rod and Pin Hole Rod Type are available.

Block Clamp Push/Pull Horizontal Gasket Type

Features

1. 복동으로 작동
2. 가스켓 타입 포트
3. 설치 용이
4. 작동압력 : 15~250kgf/cm²
5. 피스톤 속도 : 8~100mm/s
6. 사용온도 : 0~60°C

1. Double-acting
2. Gasket Type Port
3. Easy installation
4. Operating Pressure : 15~250kgf/cm²
5. Piston Speed : 8~100mm/s
6. Operating Temperature : 0~60°C

› BDH - 20 10 G (① ② ③ ④) BDH - 20 10 GC (① ② ③ ④) BDH - 20 10 GP (① ② ③ ④)

① Horizontal Type ② Piston Diameter(mm) ③ Stroke(mm)
④ Gasket, Gasket + Threaded Rod, Gasket + Pin Hole Rod

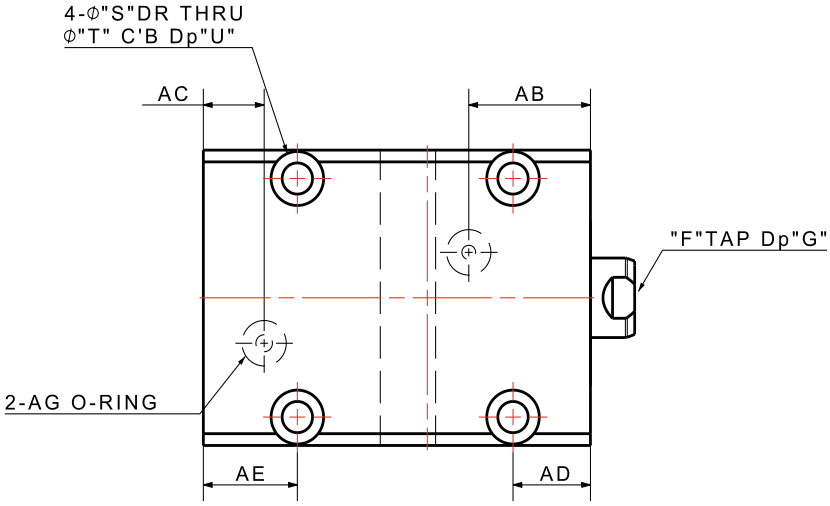

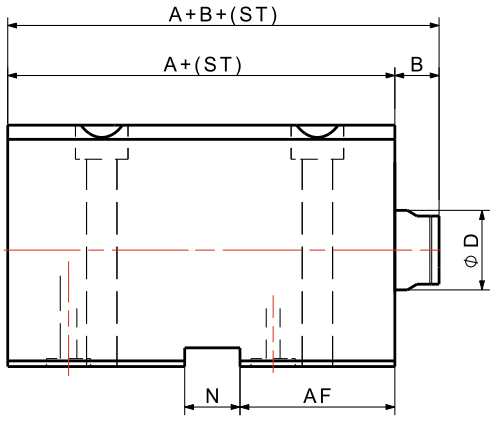

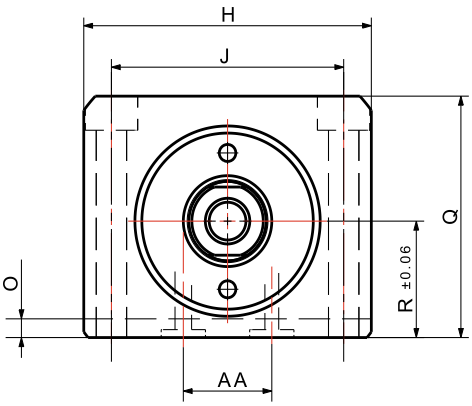

Dimensions

MODEL NO.	DIMENSIONS (mm)																					
	A	B	øD	F	G	H	J	N	O	Q	R	øS	øT	U	AA	AB	AC	AD	AE	AF	AG	Piston dia.
BDH-20xxG	43	8	12	M8 x 1.25P	16	45	35	10	3.3	40	18	5.5	9.5	6	14	20.5	9	13	15	26	P5	ø20
BDH-25xxG	45	8	14	M8 x 1.25P	16	52	42	10	3.3	43	21	5.5	9.5	6	16	22	11	14	17	28	P5	ø25
BDH-28xxG	50	8	16	M8 x 1.25P	12	62	50	10	3.3	52	24	6.6	11	6.5	18	23	11	14	18	30	P6	ø28
BDH-32xxG	54	10	18	M10 x 1.5P	15	70	56	12	3.3	56	25	9	14	9	20	26	10	14	18	33	P7	ø32
BDH-40xxG	55	10	22.4	M12x1.75P	20	80	62	12	3.3	64	29	11	17.5	11	20	24	10	14	19	31	P7	ø40
BDH-50xxG	60	10	28	M16 x 2.0P	25	94	74	14	3.8	74	31	14	20	13	20	26	13	14	20	33	P7	ø50

Block Clamp Push/Pull Double Rod Horizontal Type

Features

1. 양로드 타입
2. 다양한 사이즈
3. 복동으로 작동
4. 작동압력 : 15~250kgf/cm²
5. 피스톤 속도 : 8~100mm/s
6. 사용온도 : 0~60°C

1. Double rods type
2. Various sizes
3. Double-acting
4. Operating Pressure : 15~250kgf/cm²
5. Piston Speed : 8~100mm/s
6. Operating Temperature : 0~60°C

› BDH - 28 15 D (① ② ③ ④) BDH - 28 15 DC (① ② ③ ④)

① Horizontal Type ② Piston Diameter(mm) ③ Stroke(mm)
④ Double Rod Type, Double + Threaded Rod

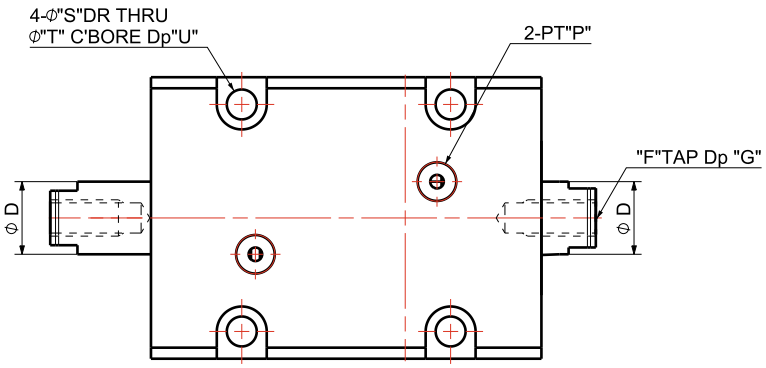

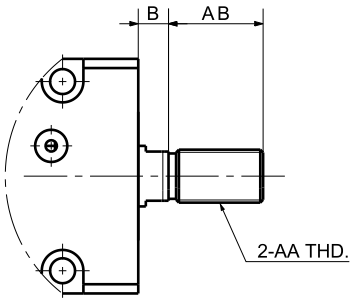

DC TYPE

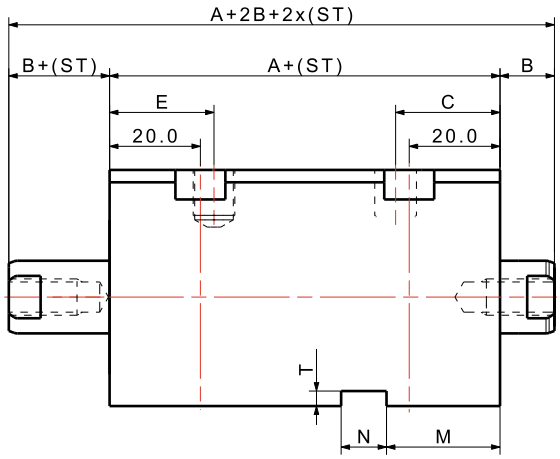

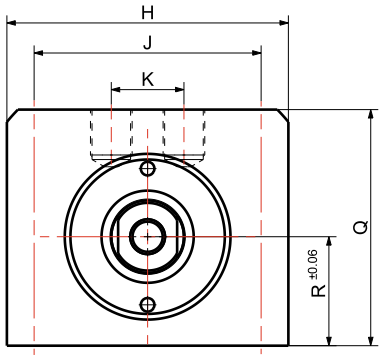

Dimensions

MODEL NO.	DIMENSIONS (mm)																					
	A	B	C	øD	E	F	G	H	J	K	M	N	O	P	Q	R	øS	øT	U	AA	AB	Piston dia.
BDH-28xxD	61	8	23	16	23	M8 x 1.25P	12	62	50	16	25	10	3.3	1/8	52	24	6.6	11	6.5	M14 x 1.5P	25	ø28
BDH-32xxD	68	10	26	18	26	M10 x 1.5P	15	70	56	20	28	12	3.3	1/4	56	25	9	14	9	M16 x 1.5P	25	ø32
BDH-40xxD	70	10	27	22.4	27	M12 x 1.75P	20	80	62	20	28	12	3.3	1/4	64	29	11	17.5	11	M20 x 1.5P	30	ø40
BDH-50xxD	75	10	29	28	29	M16 x 2.0P	25	94	74	20	29	14	3.8	1/4	74	31	14	20	13	M24 x 1.5P	35	ø50
BDH-63xxD	82	13	31.5	35.5	31.5	M20 x 2.5P	33	114	90	20	31	16	4.3	1/4	89	42	16	23	16	M30 x 1.5P	45	ø63
BDH-80xxD	92	17	33	45	33	M24 x 3.0P	33	142	114	30	32	20	4.9	3/8	109	52	18	26	18	M39 x 1.5P	60	ø80

Block Clamp Push Horizontal Type

Features

1. 단동으로 작동
2. 스프링 복귀방식
3. 설치 용이
4. 작동압력 : 15~250kgf/cm²
5. 피스톤 속도 : 8~100mm/s
6. 사용온도 : 0~60°C
7. 유로는 가능한 크게 하시오.

1. Single-acting
2. Spring return method
3. Esay installation
4. Operating Pressure : 15~250kgf/cm²
5. Piston Speed : 8~100mm/s
6. Operating Temperature : 0~60°C
7. Make piping size as big as possible

› BPH - 28 15
① ② ③

① Horizontal Type ② Piston Diameter(mm) ③ Stroke(mm)

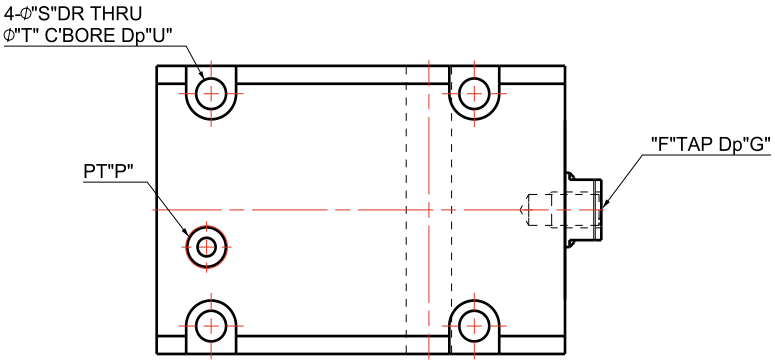

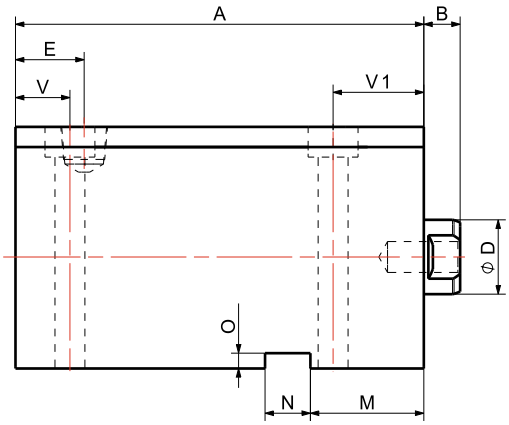

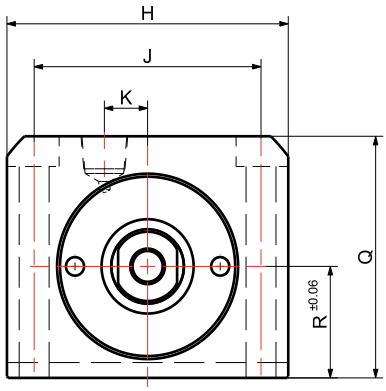

Dimensions

MODEL NO.	DIMENSIONS (mm)																					
	A		B	øD	E	F	G	H	J	K	M	N	O	P	Q	R	øS	øT	U	V	V1	Piston dia.
	ST15	ST25																				
BPH-28xx	72	90	8	16	11	M8 x P1.25	12	62	50	8	25	10	3.3	1/8	52	24	ø6.6	ø11	6.5	12	20	ø28
BPH-32xx	72	90	10	18	12.5	M10 x P1.5	15	70	56	10	28	12	3.3	1/4	56	25	ø9	ø14	8.6	10	20	ø32
BPH-40xx	73	93	10	22.4	12	M12 x P1.75	20	80	62	10	28	12	3.3	1/4	64	29	ø11	ø17.5	11	12	20	ø40
BPH-50xx	78	98	10	28	13	M16 x P2.0	25	94	74	10	29	14	3.8	1/4	74	34	ø14	ø20	13	13	20	ø50
BPH-63xx	86	106	13	35.5	15	M20 x P2.5	33	114	90	10	31	16	4.3	1/4	89	42	ø16	ø23	16	15	20	ø63

Built-In Clamp Indroduction

빌트인 클램프는 사이즈를 최소로 축소한 제품으로 단동으로 작동되고 몸통에 나사가 있습니다.
로케이션 실린더로 사용하기도 좋고 클램프 설치 환경이 매우 열악할 때 적용하면 좋습니다.

Built-In clamp is a product that has minimized its sizes.
It works with single-acting with a screw on the body.
Bluit-in clamp can be used as a location cylinder or when clamp installation environment is extremely poor.

Structure

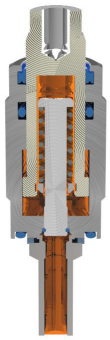

Application

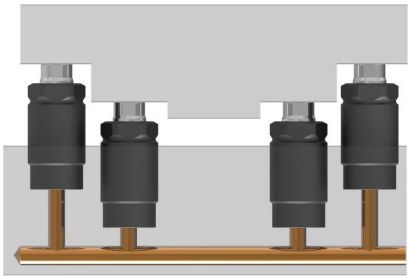

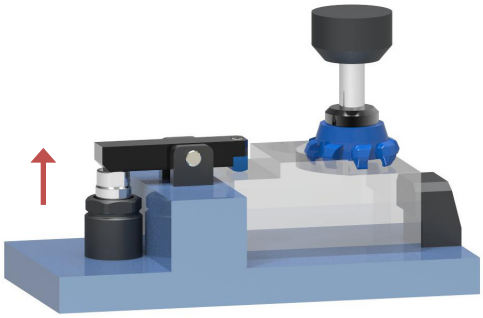

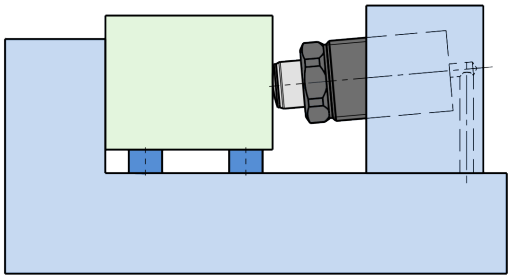

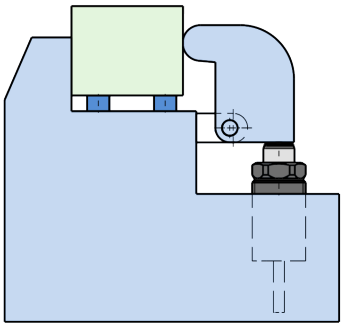

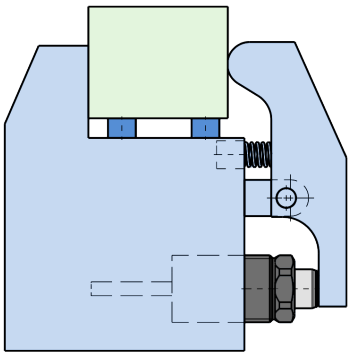

Various Sizes

Model No.

MTB-1105

MTB	–	11	05	R
1		2	3	4

1 Clamp Type
MTB = Built-In Clamp

2 Piston Diameter
ex) 11 = ø11

3 Pistion Rod Stroke
ex) 05 = 5mm

4 Rod Shape
R = Round
No Sign = Standard

Specification

MODEL NO.	Type	Weight (kg)	Max. Clamping Force (kgf)	Oil Capacity Push (cm^3)	Effective Area (cm^2)	Stroke (mm)	Piston Diameter (mm)	Operating Pressure Range	Operating Temperature Range
MTB-1105□	R	0.03	240	0.47	0.95	5	ø11	15~250 kgf/cm^2	0~60°C
MTB-1210□	No Sign	0.11	280	1.13	1.13	10	ø12		
	R	0.11							
MTB-1412□	No Sign	0.13	380	1.85	1.54	12	ø14		
	R	0.13							
MTB-1814□	No Sign	0.22	640	3.56	2.54	14	ø18		
	R	0.21							
MTB-2215□	No Sign	0.38	950	5.70	3.80	15	ø22		
	R	0.36							
MTB-3020□	No Sign	0.78	1,770	14.13	7.07	20	ø30		
	R	0.76							
MTB-3625□	No Sign	1.27	2,540	25.43	10.17	25	ø36		
	R	1.22							
MTB-4525□	No Sign	1.87	3,970	39.74	15.90	25	ø45		
	R	1.78							

* 과도한 힘으로 결합시 불량의 원인이 됨.
* Assembly with excessive force will cause defact.

Built-In Clamp Round Rod Type

Features

1. 내경에 비해 피스톤 로드의 외경이 매우 굵어서 튼튼하게 사용할 수 있다.
2. 스크로크에 비해 전장이 짧아 좁은 공간에 설치할 수 있다.
3. 실린더끼리 가장 가깝게 설치 할 수 있고 스프링으로 복귀된다.
4. 매니홀더식으로 설치하면 배관 부담을 쉽게 벗어 날 수 있다.
5. 작동압력 : 15~250kgf/cm^2
6. 사용온도 : 0~60°C
7. 유로는 가능한 크게 하시오.

1. The outer diameter of the piston rod is very thick compared to the inner diameter. Therefore, it can be used stably.
2. The total length is shorter compared to stroke and can be installed in a crawlspace.
3. The cylinders can be installed closest to each other and return to the spring.
4. You can be ease of piping burden if installed in the manifold method.
5. Operating Pressure : 15~250kgf/cm^2
6. Operating Temperature : 0~60°C
7. Make piping size as big as possible.

› MTB - 11 05 R
① ② ③

① Piston diameter(mm) ② Total stroke(mm) ③ Round Rod

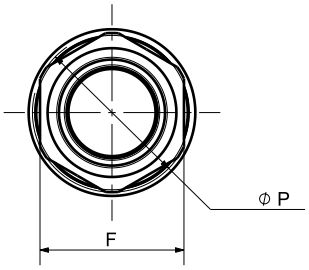

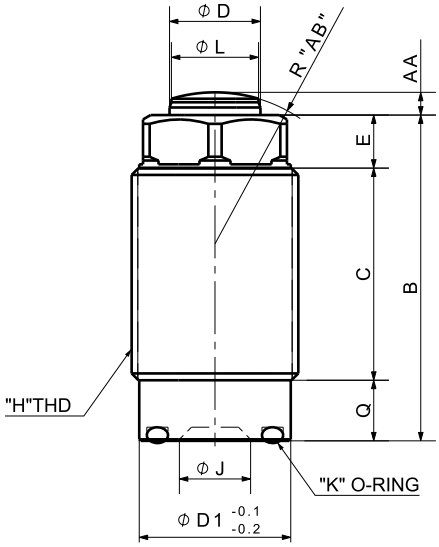

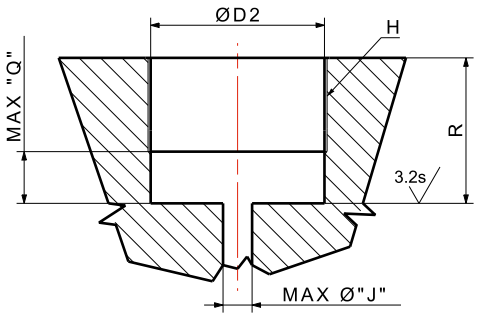

MOUNTING AREA

Dimensions

MODEL NO.		MTB-1105R	MTB-1210R	MTB-1412R	MTB-1814R	MTB-2215R	MTB-3020R	MTB-3625R	MTB-4525R
DIMENSIONS (mm)	B	27	43	44	46	54.5	72	75.5	78
	C	19	28	26	27	35.5	47	48.5	48
	øD	6	12	14	18	22.4	30	35.5	45
	øD1	14	20	22	28	34.3	43.3	52.6	62.6
	øD2	14.5	20.5	22.5	28.5	34.5	43.5	53	63
	E	4	7	8	9	11	15	15	17
	F	12	19	22	27	32	41	50	60
	H	M16 x 1.5P	M22 x 1.5P	M24 x 1.5P	M30 x 1.5P	M36 x 1.5P	M45 x 1.5P	M55 x 2.0P	M65 x 2.0P
	J	10	11	12	15	18	24	30	40
	K	P10A	P14	P16	P22	AS568-121	P32	P40	P50
	L	-	11.5	13	17	22.4	28	35.5	45
	O	-	5.5	5.5	7	9.5	9.5	11	13
	P	-	21	24	29	35.5	45	55	66
	Q	4	8	10	10	8	10	12	13
	R	8~23	16~36	20~36	20~37	16~43	20~57	24~60	26~61
	AA	1	3	3	3.5	4	5	6	7
	AB	R12	R20	R25	R32	R40	R60	R60	R70

* 과도한 힘으로 결합시 불량의 원인이 됨.
* Assembly with excessive force will cause defact.

Built-In Clamp Standard Type

Features

1. 내경에 비해 피스톤 로드의 외경이 매우 굵어서 튼튼하게 사용할 수 있다.
2. 스크로크에 비해 전장이 짧아 좁은 공간에 설치할 수 있다.
3. 실린더끼리 가장 가깝게 설치 할 수 있고 스프링으로 복귀된다.
4. 매니홀더식으로 설치하면 배관 부담을 쉽게 벗어 날 수 있다.
5. 작동압력 : 15~250kgf/cm^2
6. 사용온도 : 0~60°C
7. 유로는 가능한 크게 하시오.

1. The outer diameter of the piston rod is very thick compared to the inner diameter. Therefore, it can be used stably.
2. The total length is shorter compared to stroke and can be installed in a crawlspace.
3. The cylinders can be installed closest to each other and return to the spring.
4. You can be ease of piping burden if installed in the manifold method.
5. Operating Pressure : 15~250kgf/cm^2
6. Operating Temperature : 0~60°C
7. Make piping size as big as possible.

› MTB - 11 05
① ②

① Piston diameter(mm) ② Total stroke(mm)

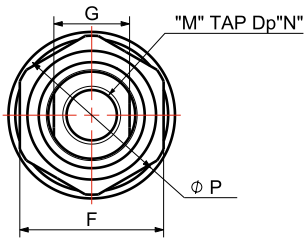

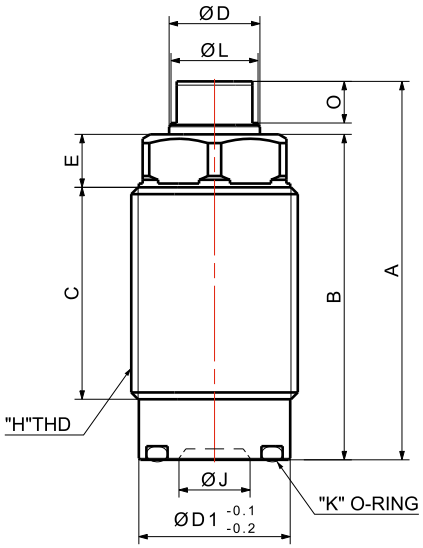

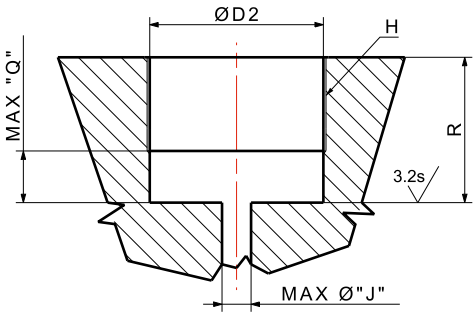

MOUNTING AREA

Dimensions

MODEL NO.		MTB-1210	MTB-1412	MTB-1814	MTB-2215	MTB-3020	MTB-3625	MTB-4525
DIMENSIONS (mm)	A	50	52	55	66.5	84	88.5	94
	B	43	44	46	54.5	72	75.5	78
	C	28	26	27	35.5	47	48.5	48
	øD	12	14	18	22.4	30	35.5	45
	øD1	20	22	28	34.3	43.3	52.6	62.6
	øD2	20.5	22.5	28.5	34.5	43.5	53	63
	E	7	8	9	11	15	15	17
	F	19	22	27	32	41	50	60
	G	10	12	16	19	24	30	36
	H	M22x1.5P	M24x1.5P	M30x1.5P	M36x1.5P	M45x1.5P	M55x2.0P	M65x2.0P
	J	11	12	15	18	24	30	40
	K	P14	P16	P22	AS568-121	P32	P40	P50
	L	11.5	13	17	22.4	28	35.5	45
	M	M8	M8	M8	M8	M10	M12	M16
	N	8	8	8	10	11	12	16
	O	5.5	5.5	7	9.5	9.5	11	13
	P	21	24	29	35.5	45	55	66
	Q	8	10	10	8	10	12	13
	R	16~36	20~36	20~37	16~43	20~57	24~60	26~61

Flange Clamp Introduction

플랜지 클램프는 설치가 쉽고 피스톤 로드가 직선으로 움직이며 배관은 파이프 또는 매니폴드 방식으로 다양하게 할 수 있어서 응용성이 높습니다. 아울러 플로우 컨트롤 밸브를 간편하게 장착할 수 있습니다.

Flange clamp is easy to install and the piston rod moves in a straight line. It has high applicability as the piping can be varied in a pipe or a manifold method.
Flow control valve can also be installed easily.

Top Flange

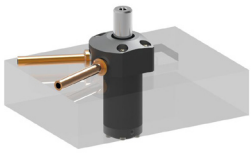

Piping

Manifold

Bottom Flange

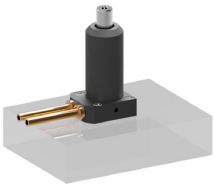

Piping

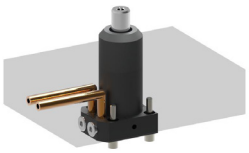

Manifold

Application

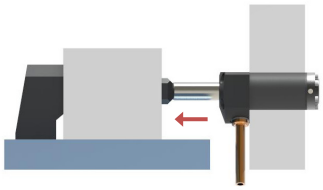

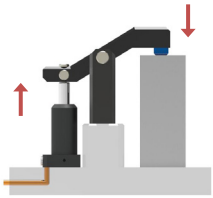

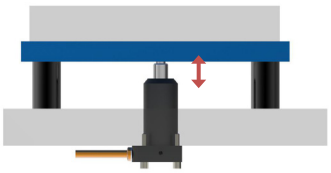

Rod Shape

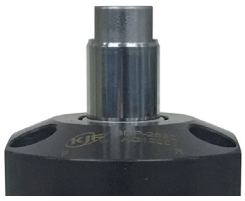

Top, Standard

Top, Pin Hole

Bottom, Standard

Bottom, Pin Hole

Model No.

SDP-2530GV

SDP	–	25	30	GV
1		2	3	4

1 Clamp Type
SDP = Flange Clamp

2 Piston Diameter
ex) 25 = ø25

3 Pistion Rod Stroke
ex) 30 = 30mm

4 Type
No Sign = Top
P = Top, Pin Hole Rod
G = Top, Gasket
GP = Top, Gasket + Pin Hole Rod
GV = Top, Gasket + Flow Control Valve
GPV = Top, Gasket + Pin Hole Rod + Flow Control Valve

F = Bottom
FP = Bottom, Pin Hole Rod
FG = Bottom, Gasket
FGP = Bottom, Gasket + Pin Hole Rod
FGV = Bottom, Gasket + Flow Control Valve
FGPV = Bottom, Gasket + Pin Hole Rod + Flow Control Valve
FGT = Bottom , Gasket Top
FGVT = Bottom, Gasket Top + Flow Control Valve
FGPVT = Bottom, Gasket Top + Pin Hole Rod + Flow Control Valve

Specification

Top Type

MODEL NO.		SDP-2530□			SDP-3037□			SDP-4055□			SDP-5577□		
Type		No Sign	G	GV	No Sign	G	GV	No Sign	G	GV	No Sign	G	GV
		P	GP	GPV	P	GP	GPV	P	GP	GPV	P	GP	GPV
Weight (kg)		1.06	0.99	1.00	1.86	1.80	1.81	3.27	3.14	3.15	6.74	6.36	6.38
		1.05	0.98	0.99	1.85	1.78	1.79	3.25	3.11	3.12	6.72	6.35	6.37
Max. Clamping Force(kgf)	Push	1,230			1,770			3,140			5,940		
	Pull	590			780			1,600			3,530		
Effective Area (cm²)	Push	4.91			7.07			12.56			23.75		
	Pull	2.36			3.13			6.41			14.13		
Oil Capacity (cm³)	Push	14.72			26.14			69.08			182.84		
	Pull	7.09			11.57			35.23			108.80		
Piston Diameter (mm)		ø25			ø30			ø40			ø55		
Operating Pressure Range		15~250 kgf/cm²											
Operating Temperature Range		0~60°C											

Bottom Type

MODEL NO.		SDP-2530□					SDP-3037□					SDP-4055□					SDP-5577□				
Type		F	FG	FGV	FGT	FGVT	F	FG	FGV	FGT	FGVT	F	FG	FGV	FGT	FGVT	F	FG	FGV	FGT	FGVT
		FP	FGP	FGPV	FGPT	FGPVT	FP	FGP	FGPV	FGPT	FGPVT	FP	FGP	FGPV	FGPT	FGPVT	FP	FGP	FGPV	FGPT	FGPVT
Weight (kg)		1.23	1.24	1.25	1.24	1.25	2.22	2.25	2.26	2.24	2.25	3.96	3.99	4.01	3.98	3.99	8.24	8.29	8.31	8.29	8.31
		1.22	1.23	1.24	1.23	1.24	2.20	2.23	2.24	2.23	2.24	3.94	3.98	3.99	3.98	3.99	8.23	8.28	8.30	8.28	8.30
Max. Clamping Force(kgf)	Push	1,230					1,770					3,140					5,940				
	Pull	590					780					1,600					3,530				
Effective Area (cm²)	Push	4.91					7.07					12.56					23.75				
	Pull	2.36					3.13					6.41					14.13				
Oil Capacity (cm³)	Push	14.72					26.14					69.08					182.84				
	Pull	7.09					11.57					35.23					108.80				
Piston Diameter (mm)		ø25					ø30					ø40					ø55				
Operating Pressure Range		15~250 kgf/cm²																			
Operating Temperature Range		0~60°C																			

Flange Clamp Top, Standard/G/GV/P/GP/GPV Type

Features

1. 피스톤로드가 직선으로 작동
2. 작동압력 : 15~250kgf/cm²
3. 사용온도 : 0~60°C

1. Piston rod moves in linear.
2. Operating Pressure : 15~250kgf/cm²
3. Operating Temperature : 0~60°C

› SDP - 25 30
SDP - 25 30 G
SDP - 25 30 GV
SDP - 25 30 P
SDP - 25 30 GP
SDP - 25 30 GPV
① ② ③ ④

① Double acting(Linear move)
② Piston Diameter(mm)
③ Total Stroke(mm)
④ No sign = Standard
G = Gasket
GV = Gasket + Side Valve
P = Pin Hole Rod
GP = Gasket + Pin Hole Rod
GPV = Gasket Pin Hole Rod + Side Valve

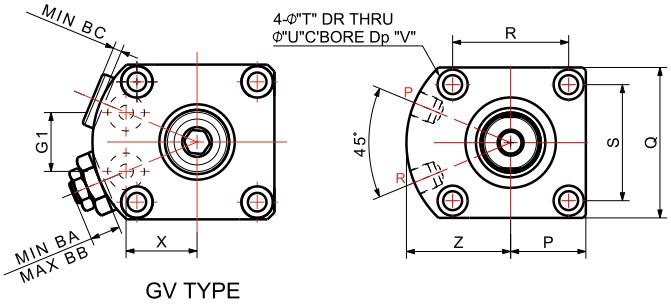

GV TYPE

P : Push
R : Pull

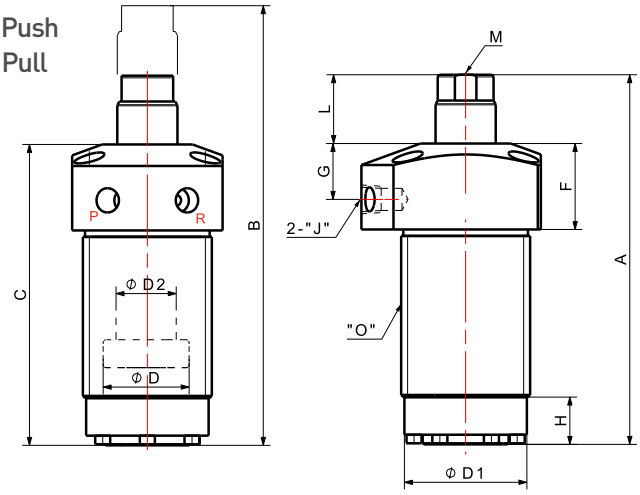

Dimensions

MODEL NO.		SDP-2530□	SDP-3037□	SDP-4055□	SDP-5577□
DIMENSIONS (mm)	A	126	153	172	219
	B	156	190	227	296
	C	99	123	140	182
	øD	25	30	40	55
	øD1	37	45.5	57	76
	øD2	18	22.4	28	35
	F	30	35	40	45
	G	21	22	26	30
	G1	20	23	31	35
	H	12	25	22	22
	J	PT 1/8	PT 1/4	PT 1/4	PT 3/8
	L	27	30	32	37
	M	M8 x 1.25P	M10 x 1.5P	M12 x 1.75P	M16 x 2.0P
	O	M40 x 1.5P	M48 x 1.5P	M60 x 1.5P	M80 x 2.0P
	P	19	27	35	44.5
	Q	55	54	70	89
	R	25	42	54	70
	S	42	42	54	70
	T	6.5	6.5	9	11
	U	11	11	14	17
	V	15	15	20	25
	X	23	25.5	35	43
	Y	P6	P6	P6	P10
	Z	32	36.5	48.5	59
	BA	7.1	7.2	7.2	5.7
	BB	13.7	16.8	16.8	15.3
	BC	3.9	3.3	3.3	1.8
	AA	ø8.0	ø10.0	ø12.0	ø16.0
	AB	10	12	13	17
	AC	ø17.0	ø21.0	ø26.5	ø33.0
	AD	12	14	18	22
	AE	22.5	26	30	37
	AF	27	30	34	41

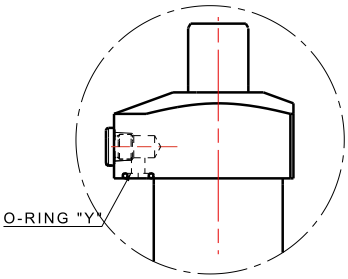

G TYPE

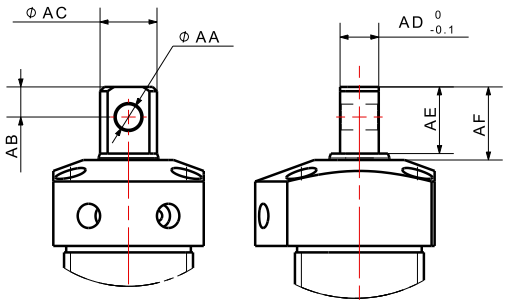

P TYPE

Flange Clamp

Bottom, F/FG/FGV/FGT/FGVT/ FP/FGP/FGPV/FGPT/FGPVT Type

Features

1. 하부 플랜지 배관
2. 작동압력 : 15~250kgf/cm²
3. 사용온도 : 0~60°C

1. Bottom flange circuit
2. Operating Pressure : 15~250kgf/cm²
3. Operating Temperature : 0~60°C

› SDP - 25 30 F
SDP - 25 30 FG
SDP - 25 30 FGV
SDP - 25 30 FGT
SDP - 25 30 FGVT
SDP - 25 30 FP
SDP - 25 30 FGP
SDP - 25 30 FGPV
SDP - 25 30 FGPT
SDP - 25 30 FGPVT
① ② ③ ④

① Double acting(Linear move)
② Piston Diameter(mm)
③ Total Stroke(mm)
④ F = Bottom Flange,
FG = Gasket
FGV = Gasket + Side Valve
FGT = Gasket Top
FGVT = Gasket Top + Side Valve
FP = Pin Hole Rod
FGP = Gasket + Pin Hole Rod
FGPV = Gasket + Pin Hole Rod + Side Valve
FGPT = Gasket Top + Pin Hole Rod
FGPVT = Gasket Top + Pin Hole Rod + Sdide Valve

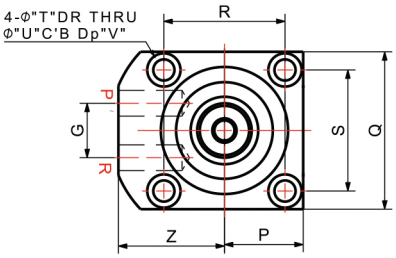

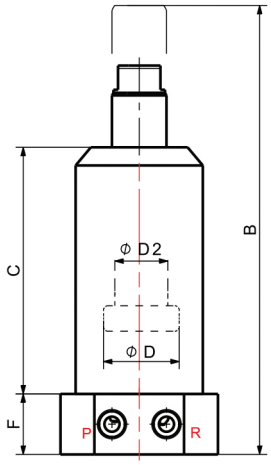

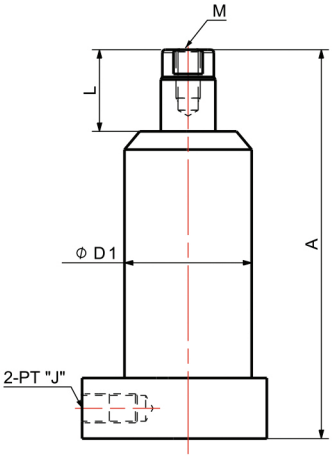

P : Push R : Pull

FGV TYPE

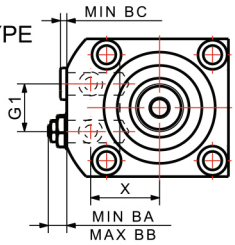

FG TYPE

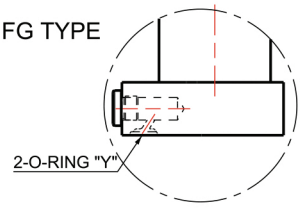

FGVT TYPE

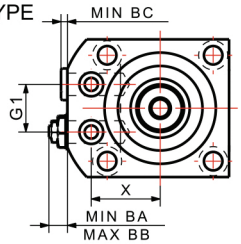

FGT TYPE

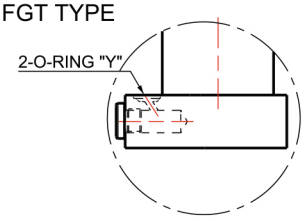

Dimensions

MODEL NO.		SDP-2530F□	SDP-3037F□	SDP-4055F□	SDP-5577F□
DIMENSIONS (mm)	A	128.5	153	172	219
	B	158.5	190	227	296
	C	99	123	140	182
	øD	25	30	40	55
	øD1	42	52	65	65
	øD2	18	22.4	28	35
	F	20	25	28	30
	G1	18	20	24	30
	H	12	25	22	22
	J	PT 1/8	PT 1/4	PT 1/4	PT 3/8
	L	27	30	32	37
	M	M8 x 1.25P	M10 x 1.5P	M12 x 1.75P	M16 x 2.0P
	P	26	30	40	48.5
	Q	52	60	80	97
	R	40	46	64	76
	S	40	46	64	76
	T	7	7	9	11
	U	11	11	14	17
	V	7	15	9	11
	X	26	31	38	47
	Y	P6	P6	P6	P7
	Z	35	40	50	59
	BA	7.1	7.2	7.2	5.7
	BB	13.7	16.8	16.8	15.3
	BC	3.9	3.3	3.3	1.8
	AA	ø8.0	ø10.0	ø12.0	ø16.0
	AB	10	12	13	17
	AC	ø17.0	ø21.0	ø26.5	ø33.0
	AD	12	14	18	22
	AE	22.5	26	30	37
	AF	27	30	34	41

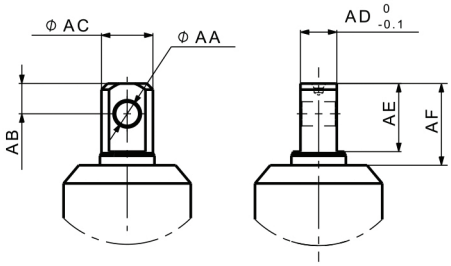

P TYPE

Threaded Body Clamp Introduction

몸통 부위에 나사가 가공되어 있어 위치결정이 용이합니다. 커버를 나사식으로 조립하였기 때문에 씰 교환이 용이하며, 이로 인한 실린더 보수를 쉽게 할 수 있습니다. 내경이 ø13~ø63까지 7종류가 있습니다.

Threaded body clamp has screws processed on the body for easy positioning. The cover is assembled in screw type to facilitate seal exchange. This ensures easy cylinder maintenance. There are seven available piston diameters from ø13 to ø63.

Mounting Method

Double-acting

Single-acting

Application

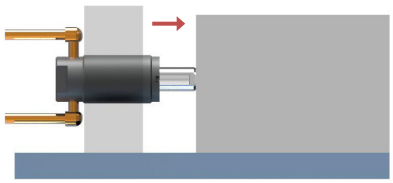

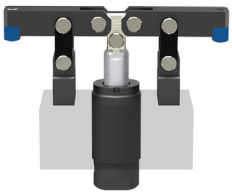

고려사항 Note

사용하는 스트로크는 가급적 표준 실린더 스트로크의 80% 이내에서 사용한다. 또한 로드 부착물 무게가 무거운 경우와 리턴시 빠르고 일정한 속도를 원할 경우는 복동을 선택하고 배관의 이점을 이용시 단동을선택한다.

The stroke should be preferably used within 80% of the standard cylinder stroke.
If the rod fitting is heavy and fast & constant return speed is required, choose double-acting. If easy piping is required, choose single-acting.

단동 실린더 취급시 주의 사항 Caution for operating single-acting cylinder

단동 실린더 내부에는 인장 스프링이 들어 있어 로드에 부착물 고정시 로드를 스패너 등으로 잡고 고정한다. 그렇지 않으면 스프링 또는 볼트가 파손되므로 제품의 사용이 불가능하다. 위의 사항을 따르지 않아 생기는 손상에 대해서는 A/S의 책임을 지지 않는다.

There is a tension spring inside the single-acting cylinder, so be sure to hold the rod with a spanner when fastening the fitting to the rod.
Otherwise, the product may be unusable due to spring or bolt damage.
We are not responsible for product damage caused by failure to comply with the instructions aforementioned.

Model No.

TBD-3225

TBD	–	32	25
1		2	3

1 Clamp Type
TBD = Threaded Body Clamp (Double-acting)
TBP = Threaded Body Clamp (Single-acting)

2 Piston Diameter
ex) 32 = ø32

3 Pistion Rod Stroke
ex) 25 = 25mm

Specification

Push/Pull Type

MODEL NO.	Weight (kg)	Max. Clamping Force(kgf)	Effective Area (cm^2)	Oil Capacity (cm^3)	Stroke (mm)	Piston Diameter (mm)	Operating Pressure Range	Operating Temperature Range
TBD-3225	1.2	1,800	7.2	18.1	25	ø32	15~250 kgf/cm^2	0~60°C
TBD-3250	1.4			36.3	50			
TBD-4025	2.1	2,920	11.7	29.5	25	ø40		
TBD-4050	2.6			58.9	50			
TBD-5025	3.0	4,620	18.5	47.1	25	ø50		
TBD-5050	3.6			94.2	50			
TBD-6325	4.1	7,570	30.3	76.0	25	ø63		
TBD-6350	4.8			152.0	50			

Push Type

MODEL NO.	Weight (kg)	Max. Clamping Force(kgf)	Effective Area (cm^2)	Oil Capacity Push (cm^3)	Stroke (mm)	Piston Diameter (mm)	Operating Pressure Range	Operating Temperature Range
TBP-1308	0.11	320	1.30	1.0	8	ø13	15~250 kgf/cm^2	0~60°C
TBP-2015	0.23	780	3.14	4.7	15	ø20		
TBP-2615	0.34	1,320	5.3	8.0	15	ø26		

Threaded Body Clamp Push/Pull Type

Features

1. 몸통의 나사산을 이용하면, 설치가 매우 쉽다.
2. 보통의 실린더는 몸통의 양쪽 끝에 포트가 있으나 두개의 포트가 모드 한쪽에 있어서 픽스쳐에 사용하기 쉽다.
3. 다양한 크기의 제품이 제작된다.
4. 복동으로 작동되며, 동작의 확실성을 보장한다.
5. 작동압력 : 15~250kgf/cm²
6. 피스톤 속도 : 8~100mm/s
7. 사용온도 : 0~60°C

1. Easy installation with threaded body.
2. Common cylinders have ports at both ends of the body, but this has two ports on one side and is thus easy to use on fixtures.
3. Products are manufactured in various sizes.
4. It performs double-acting and ensure operational accuracy.
5. Operating Pressure : 15~250kgf/cm²
6. Piston Speed : 8~100mm/s
7. Operating Temperature : 0~60°C

Mounting Accessory(Page 117): MBS4518, MBR4510, MBS6125, MBR6111, MBS7025, MBR7012, MBS8025, MBR8015

› TBD - 32 25
① ② ③

① Double-acting ② Piston Diameter(mm) ③ Total stroke(mm)

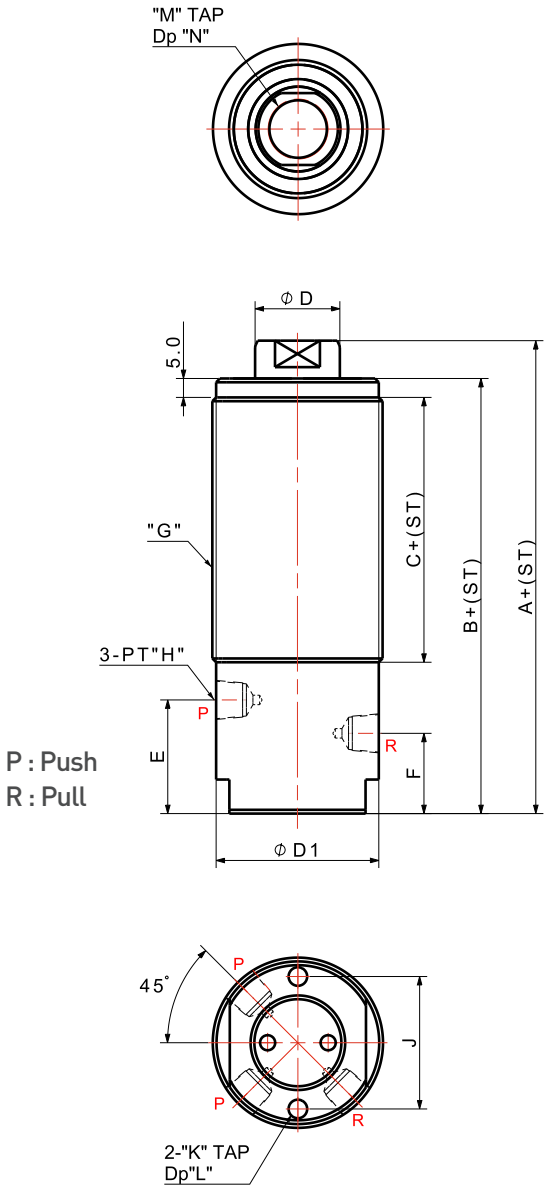

Dimensions

MODEL NO.		TBD-32xx	TBD-40xx	TBD-50xx	TBD-63xx
DIMENSIONS (mm)	A	100	100	105	112
	B	90	90	97	97
	C	45	43	43	45
	øD	22.4	30	40	50
	øD1	43	57	67	77
	E	29	29	29	29
	F	22	22	22	22
	G	M45x1.5P	M60x2.0P	M70x2.0P	M80x2.0P
	H	1/4	1/4	1/4	1/4
	J	35	40	48	58
	K	M6x1.0P	M8x1.25P	M10x1.5P	M12x1.75P
	L	15	15	15	20
	M	M16x2.0P	M20x2.5P	M24x3.0P	M30x3.5P
	N	15	20	22	25
	Piston Dia.	ø32	ø40	ø50	ø63

Threaded Body Clamp Push Type

Features

1. 몸통의 나사산을 이용하면, 설치가 매우 쉽다.
2. 인장 스프링이 들어있는 것은 피스톤을 함부로 돌리면 고장 원인이 됩니다
3. 다양한 크기의 제품이 제작된다.
4. 내부에 스프링이 장착되어 있으므로 장착물 조립시 반드시 피스톤 로드를 공구로 고정시켜야 한다.
5. 작동압력 : 15~250kgf/cm^2
6. 피스톤 속도 : 8~100mm/s
7. 사용온도 : 0~60°C
8. 유로를 가능한 크게 하시오

1. Easy installation with threaded body.
2. Excessive operation of the product's tension-spring-containing piston is a common cause of malfunction.
3. Products are manufactured in various sizes.
4. The piston rod must be fixed with the tool when assembling the fitting due to tension spring inside.
5. Operating Pressure : 15~250kgf/cm^2
6. Piston Speed : 8~100mm/s
7. Operating Temperature : 0~60°C
8. Make piping size as big as possible

Mounting Accessory(Page 117) : MBS2112, MBS4518, MBR2110, MBR4510, MBS2812, MBS6125, MBR2810, MBR6111, MBS3212, MBS7025, MBR3210, MBR7012, MBS3815, MBS8025, MBR3810, MBR8015

› TBP - 13 08
① ② ③

① Single acting ② Piston Diameter(mm) ③ Total stroke(mm)

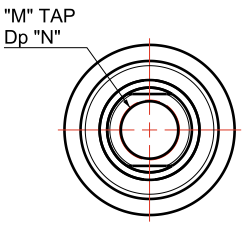

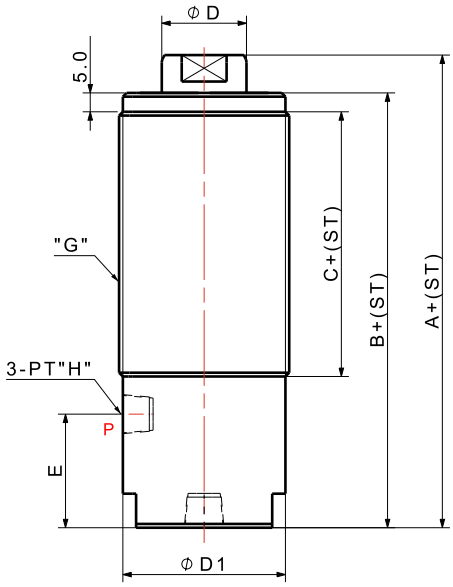

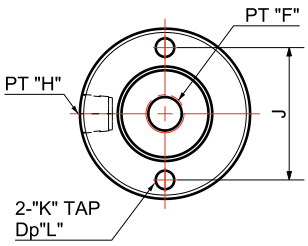

Dimensions

	MODEL NO.	TBP-1308	TBP-2015	TBP-2615
DIMENSIONS (mm)	A	54.5	47	59
	B	46	42	54
	C	36	32	31
	øD	7	12	16
	øD1	18	26	30
	E	-	-	12
	F	1/8	1/8	1/8
	G	M20x1.5P	M28x1.5P	M32x1.5P
	H	-	-	1/8
	J	-	-	-
	K	-	-	-
	L	-	-	-
	M	-	M8x1.25P	M10x1.5P
	N	-	12	17
	Piston Dia.	ø13	ø20	ø26

Hollow Clamp

Features

1. 단동으로 작동된다.
2. 로드에 홀이 관통되어 있고 끝 부분에 암나사가 있어 볼트 등을 이용할 수 있다.
3. 마운팅 위치에 따라 밀거나 당기는 곳에 이용할 수 있다.
4. 작동압력 : 15~250kgf/cm^2
5. 피스톤 속도 : 8~100mm/s
6. 사용온도 : 0~60°C
7. 유로는 가능한 크게 하시오.

1. Pull type.
2. There is a hole through the rod so bolts can be used, as there is a female screw at the end.
3. Depending on the mounting position, it can be used for pushing or pulling.
4. Operating Pressure : 15~250kgf/cm^2
5. Piston Speed : 8~100mm/s
6. Operating Temperature : 0~60°C
7. Make piping size as big as possible.

> HLP - 28 08
> ① ②

① Piston diameter(mm) ②Total stroke(mm)

Mounting Accessory(Page 117) : MBS4820, MBS4811, MBS6525, MBR6512, MBS9025, MBR9016

Application

Specification

MODEL NO.	Max. Clamping Force(kgf)	Oil Capacity (cm^3)	Effective Area (cm^2)	Stroke (mm)	Piston Dia. (mm)	Weight (kg)
HLP-2808	1,000	3.31	4.14	8	ø28	0.85
HLP-4012	1,900	9.18	7.65	12	ø40	1.91
HLP-6320	5,300	43.08	21.54	20	ø63	4.28

Dimensions

MODEL NO.		HLP-2808	HLP-4012	HLP-6320
DIMENSIONS (mm)	A	86	109	140
	B	40	53	70
	C	6	9	10
	øD	18	28	40
	E	12	15	23
	F	25	29	34
	øG	11	17	21
	øH	16	25	35
	øJ	37	65	70
	K	M48x1.5P	M65x2.0P	M90x2.0P
	L	M10x1.5P	M12x1.75P	M24x3.0P
	M	15	20	32
	N	M6x1.0P	M8x1.25P	M12x1.75P
	P	10	16	18
	Q	1/8	1/4	3/8

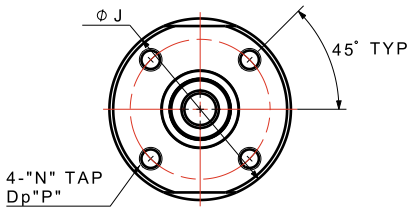

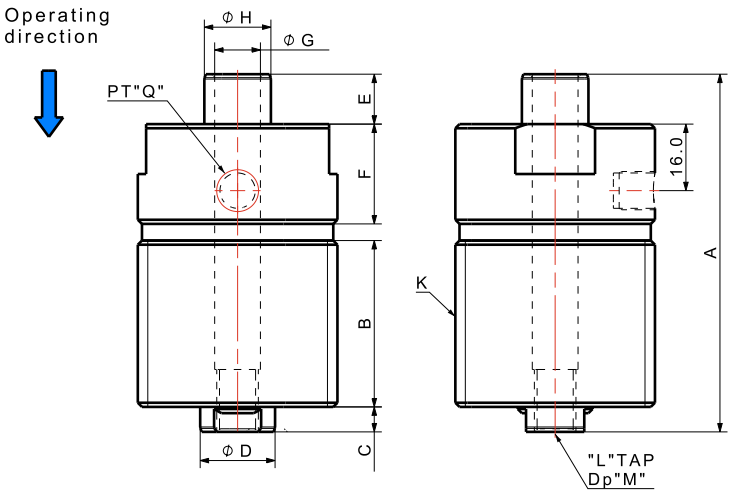

Edge Clamp

Features

1. 페이스 커터로 공작물의 상면을 가공할 때 공작물의 측면을 공구간섭 없이 클램프 할 수 있다.
2. 제품이 컴팩트하다.
3. 단동으로 작동된다.
4. 수직 클램핑력은 수평 클램핑력의 약 1/3이 작용한다.
5. 작동압력 : 15~250kgf/cm^2
6. 사용온도 : 0~60°C

1. When processing the upper surface of the workpiece with a face cutter, you can clamp the side of the workpiece with the edge clamp without tool interference.
2. Compact size
3. Single-acting
4. The vertical clamping force is approximately 1/3 of the horizontal clamping force.
5. Operating Pressure : 15~250kgf/cm^2
6. Operating Temperature : 0~60°C

› EDG - 25 10
① ②

① Piston diameter(mm) ② Total stroke(mm)

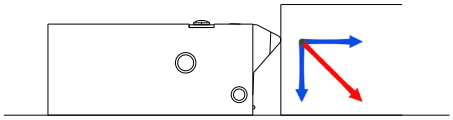

Application

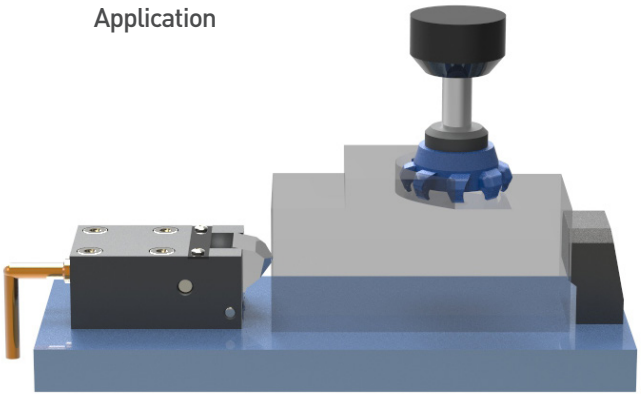

Specification

MODEL NO.	Max. Clamping Force(kgf)	Oil Capacity(cm^3)	Effective Area(cm^2)	Stroke(mm)	Piston Diameter (mm)	Weight (kg)
EDG-2510	1,220	4.9	4.9	10.0	ø25.0	1.41

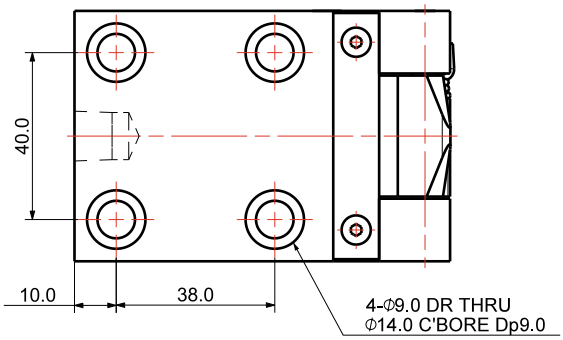

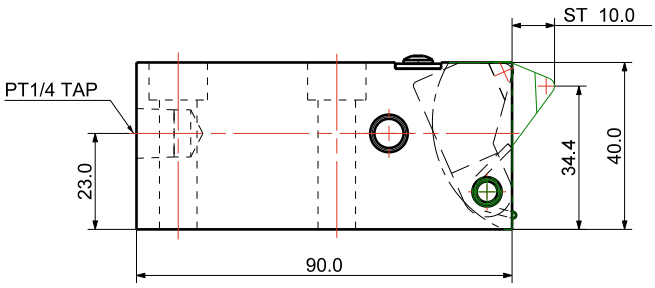

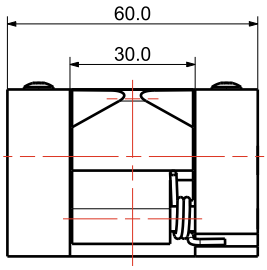

Rocker Clamp

Features

1. 신속 금형 교환용(Quick Die Change)클램프로 적합하며 특히 프레스 금형의 교환에 편리하도록 제작되어 있다.
2. 표준 공작물의 고정용으로 쉽게 응용하여 적용할 수 있다.
3. 로커 암의 작동 스트로크가 짧아 금형의 베이스 플레이트 사이의 공간이 협소하여 제약을 받는곳에 쉽게 적용할 수 있다.
4. 피봇핀으로 연결 구성되어 있어 견고하고 안전하게 사용할 수 있다.
5. 단동으로 작동된다.
6. 작동압력 : 15~250kgf/cm^2
7. 사용온도 : 0~60°C

1. This product is suitable for Quick Die Change clamps, and it is made for convenient press die replacement.
2. It can be applied easily for fixing standard workpiece.
3. The short operating stroke of the rocker lever is suitable for a constrained space between the base plates of die.
4. It is connected to the pivot pin and can be used firmly and safely.
5. It performs in single-acting.
6. Operating Pressure : 15~250kgf/cm^2
7. Operating Temperature : 0~60°C

Application

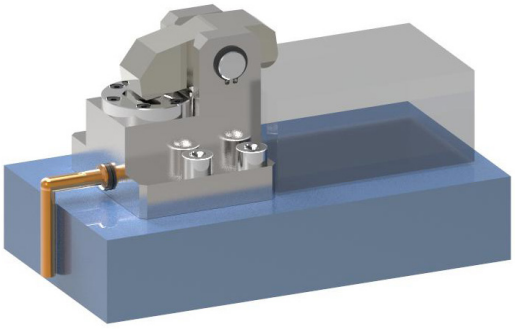

Specification

MODEL NO.	Operating Stroke(mm)	Oil Capacity (cm^3)	Effective Area (cm^2)	Max. Clamping Force(kgf)	Weight (kg)
RCS-3005	5.0	3.5	7.0	1,900	2.2

› RCS - 30 05
① ②

① Piston diameter(mm)
② Total stroke(mm)

› RCS - 3005

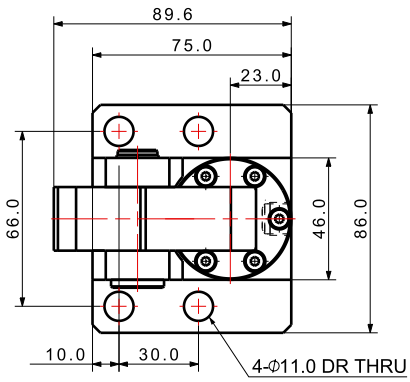

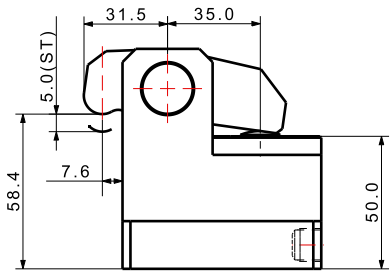

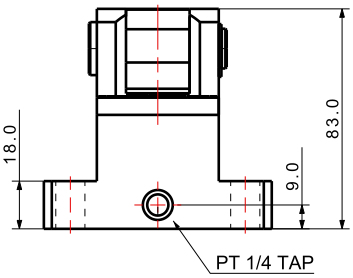

Rocker Clamp

Features

1. 신속 금형 교환용(Quick Die Change)클램프로 적합하며 특히 프레스 금형의 교환에 편리하도록 제작되어 있다.
2. 표준 공작물의 고정용으로 쉽게 응용하여 적용할 수 있다.
3. 로커 암의 작동 스트로크가 짧아 금형의 베이스 플레이트 사이의 공간이 협소하여 제약을 받는곳에 쉽게 적용할 수 있다.
4. 손에 의해 클램프 암을 원하는 방향으로 회전시킬수 있어 금형의 장탈착이 용이하도록 되어있다.
5. 피봇핀으로 연결 구성되어 있어 견고하고 안전하게 사용할 수 있다.
6. 단동으로 작동된다.
7. 밑면의 암나사와 표준 T-슬롯너트 등을 이용하여 설치할 수 있으며 마운팅 구멍 높이에 따른 스페이스를 이용하여 클램핑 높이를 다양하게 조절할 수 있다.
8. 작동압력 : 15~250kgf/cm^2
9. 사용온도 : 0~60℃

1. This product is suitable for Quick Die Change clamps, and it is made for convenient press die replacement.
2. It can be applied easily for fixing standard workpiece.
3. The short operating stroke of the rocker lever is suitable for a constrained space between the base plates of die.
4. The clamp lever can be rotated to the desired direction, making it easy to attach/detach the mold.
5. It is connected to the pivot pin and can be used firmly and safely.
6. It performs in single-acting.
7. It can be installed using a female thread on the bottom and a standard T-slot nut, and the clamping height can be adjusted by the space according to the mounting hole height.
8. Operating Pressure : 15~250kgf/cm^2
9. Operating Temperature : 0~60°C

› RCS - 30 06
① ②

① Piston diameter(mm)
② Total stroke(mm)

Application

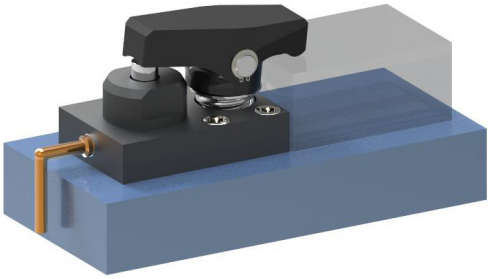

Specification

MODEL NO.	Operating Stroke(mm)	Oil Capacity (cm^3)	Effective Area (cm^2)	Max. Clamping Force(kgf)	Weight (kg)
RCS-3006	6.0	4.2	7.0	2,400	2.6

› RCS - 3006

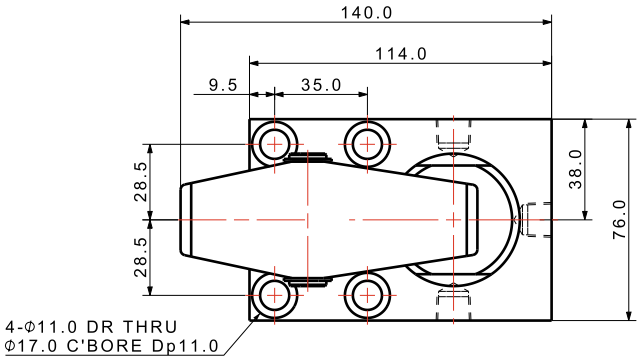

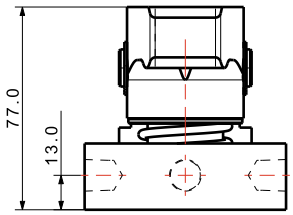

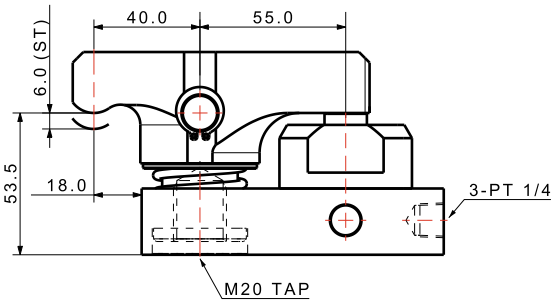

Vise Clamp Applications

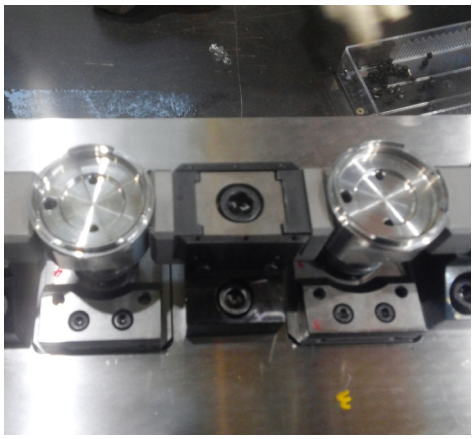

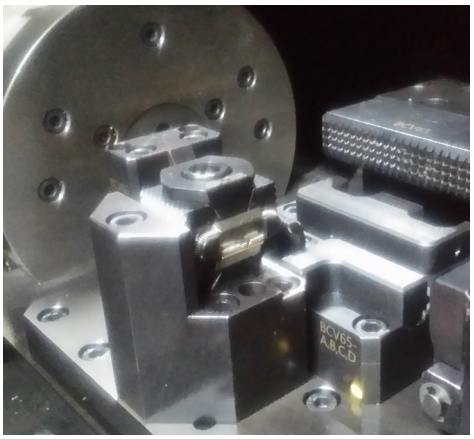

Vise Clamp Types

Small Pitch Knurling Type
STC-1223

Big Pitch Knurling Type
STC-1223M

Tap Type 1
STC-1223B

Tap Type 2
STC-1223F

Vise Clamp Introduction

1. 쐐기가 아래로 움직일 때 양쪽의 테이퍼가 옆과 아래로 밀려나면서 공작물을 클램프합니다.
2. 제한된 공간에 다량의 공작물을 가공하는 지그제작에 유리합니다.
3. 수동이든 자동이든 관계없이 모두 적용 가능합니다.

1. As the wedge moves downwards, the tapers on both sides are pushed to the side and down to clamp the workpiece.
2. It is advantageous for a jig that processes a large workpiece in a limited space.
3. The product is applicable to manual and automatic operation environment.

- STC-1223 : Knurling 1.0p
  STC-1223M : Knurling 2.0p
- STC-1223B : Length(세로치수) 41.0mm
  STC-1223F : Length(세로치수) 38.0mm

Operation

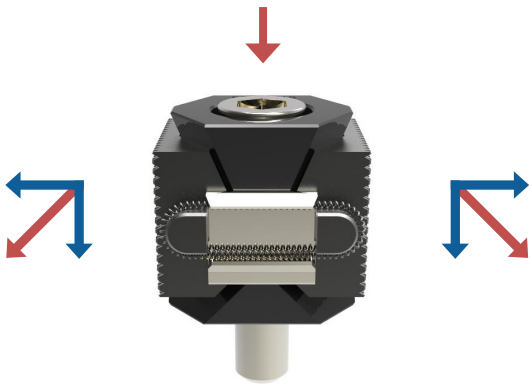

A ≠ B : 사용가능
A ≠ B : Possible

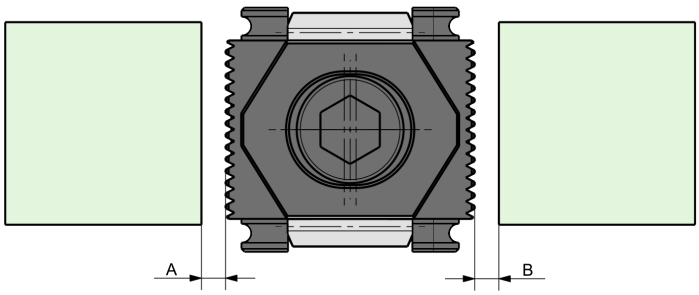

Application

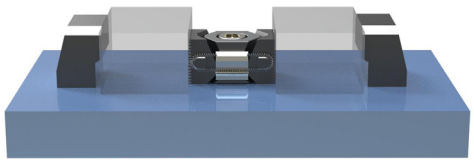

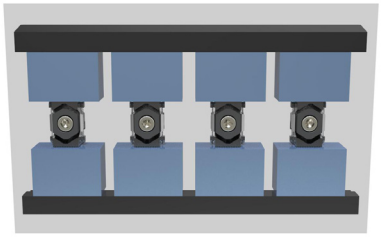

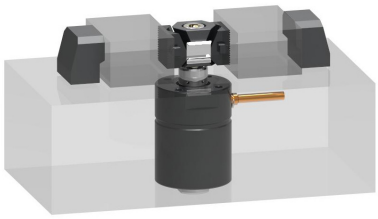

STC - 1223

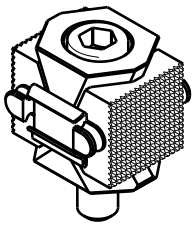

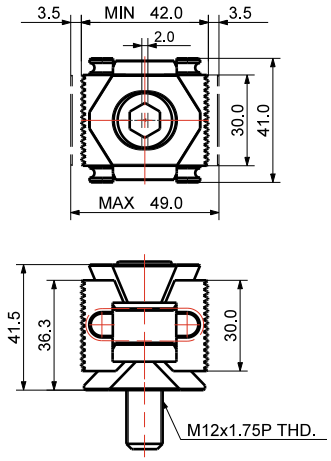

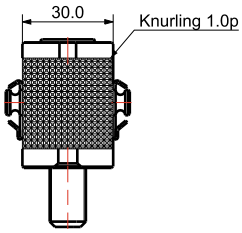

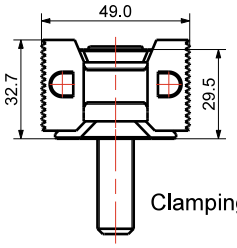

Clamping State

Weight : 0.38kg

STC - 1223M

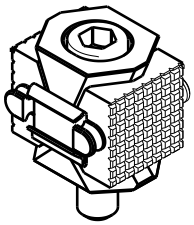

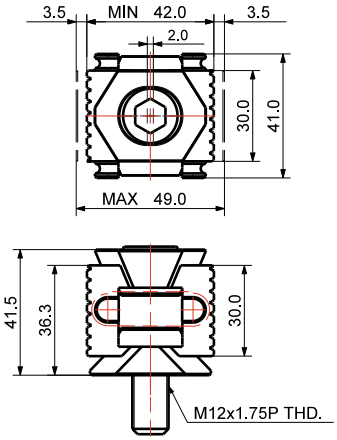

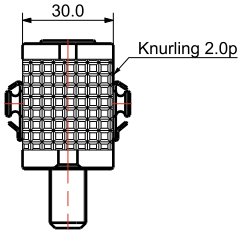

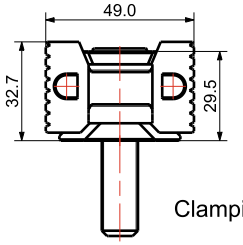

Clamping State

Weight : 0.38kg

STC - 1223B

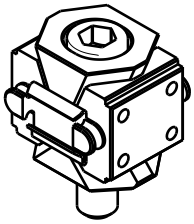

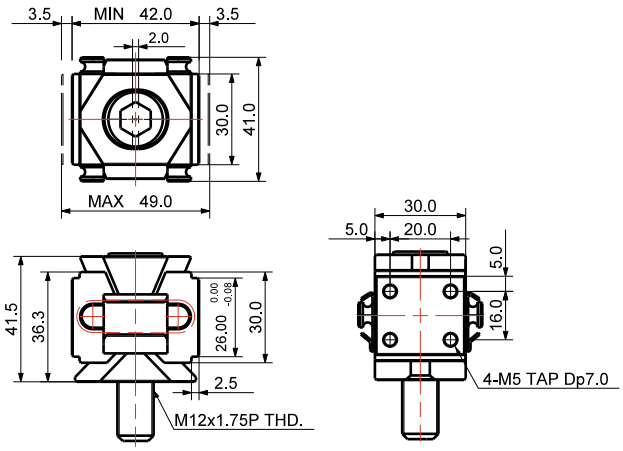

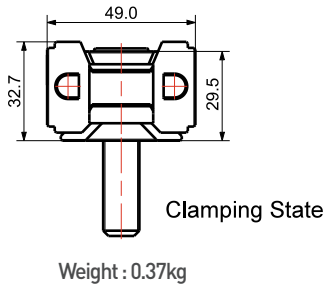

Weight : 0.37kg

STC - 1223F

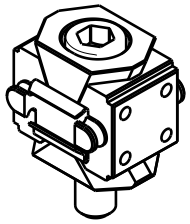

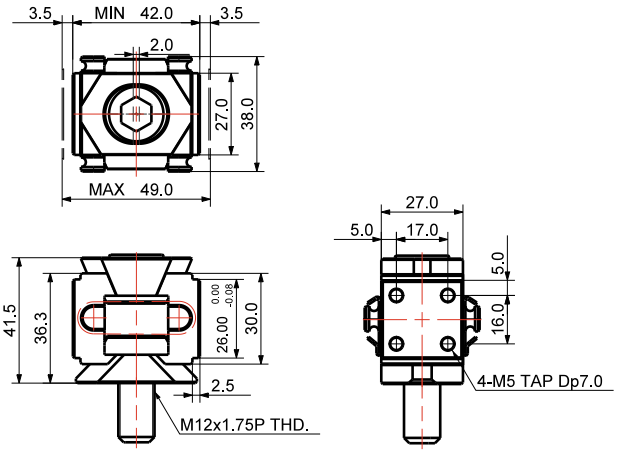

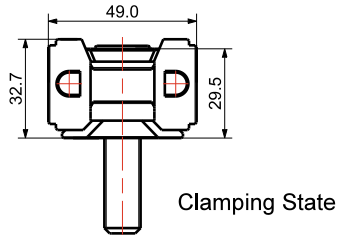

Weight : 0.35kg

Rotary Joint Applications

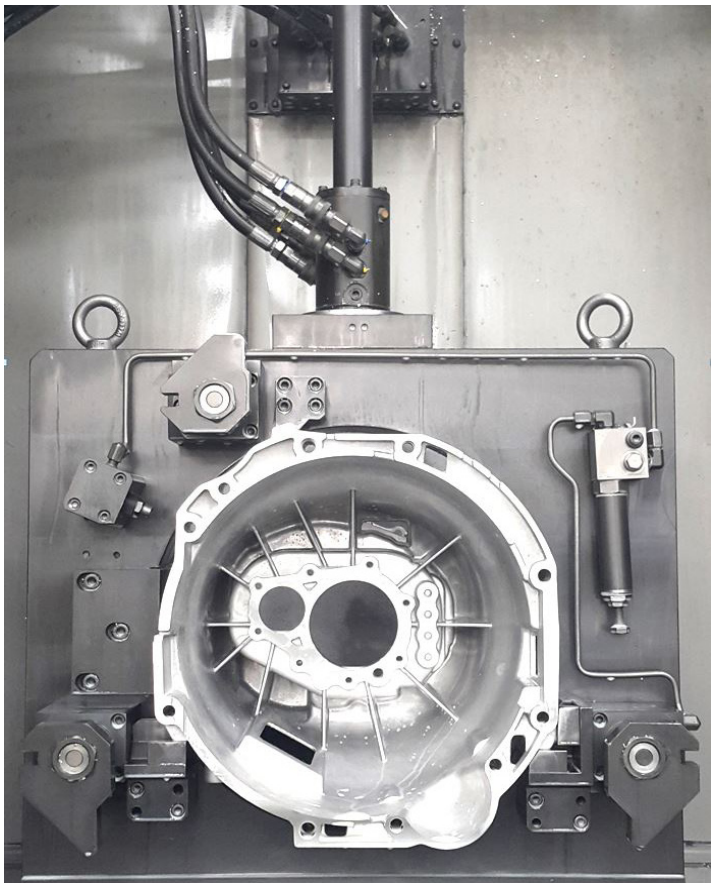

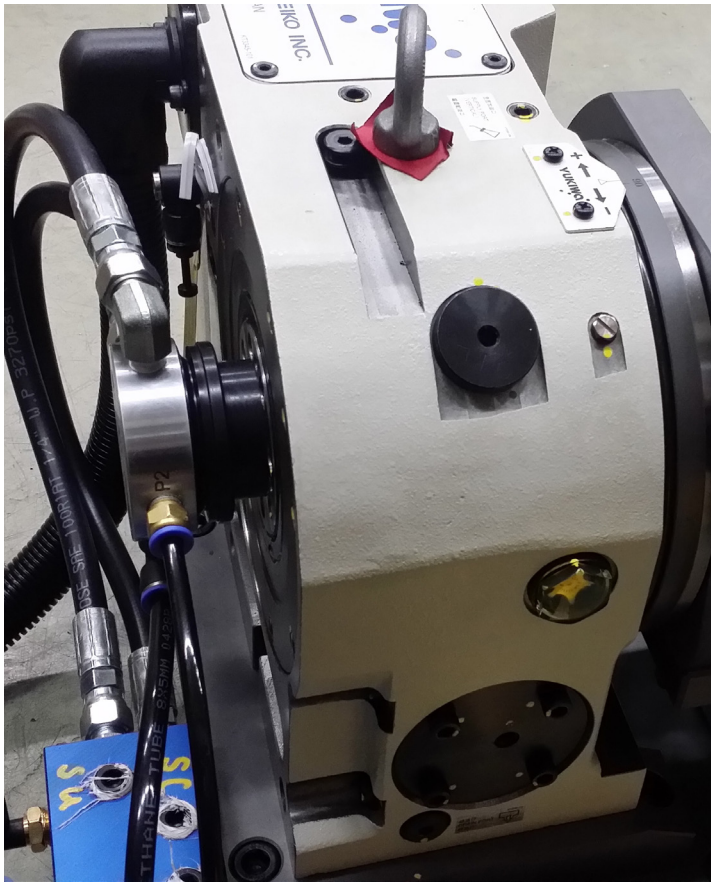

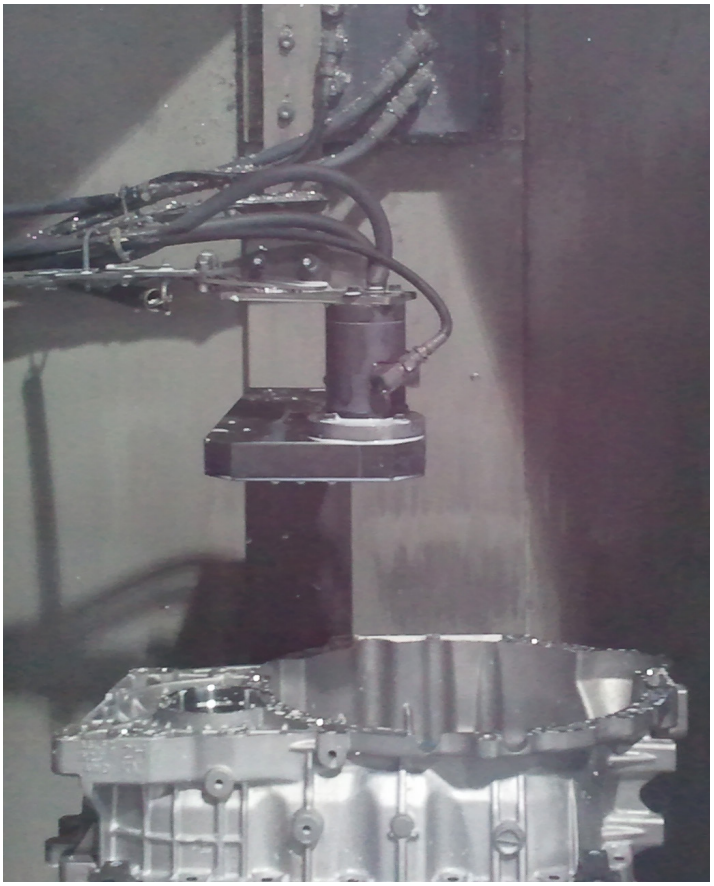

Rotary Joint Introduction

로터리 조인트는 설비 혹은 기기에서 회전체에 유압, 공압, 절삭유 또는 진공을 공급할 때 사용되어집니다.
㈜케이제이에프는 다양한 형태의 로터리 조인트를 보유하고 있으며 사용 조건에 맞는 최상의 선택이 가능합니다.

Rotary joint is used to supply hydraulic, pneumatic, cutting oil or vacuum to a rotor in equipment or facilities.
KJF has various types of rotary joint to suit various usage conditions.

Structure

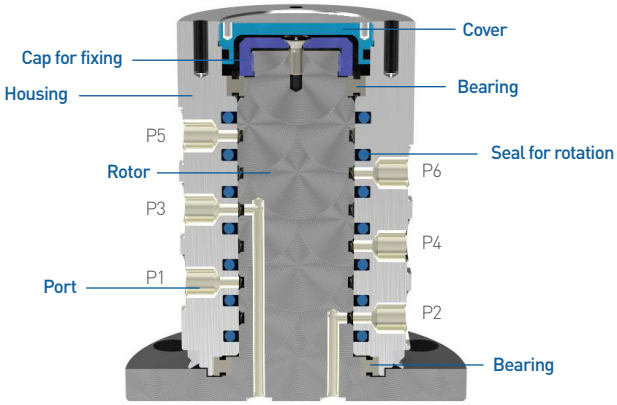

Rotary Joint Type


Flange type

Cartridge type


Compact Flange type


Top type


Male type

Rotary Joint Flange Type

Features

1. 정지된 유압 공급 라인에서 회전하는 유압 부품에 유압을 공급한다.
2. 배관의 꼬임을 방지한다.

1. Rotary joint supply hydraulic to rotating hydraulic components in the stopped hydraulic supply line.
2. It prevents piping twisting.

Specifications

1. 최대 공압 사용압력 : 9.9kgf/cm²
2. 최대 유압 사용압력 : 150kgf/cm²
3. 사용온도범위 : 0~70°C
4. 최대 허용 회전수 : 120 rpm
5. 씰 재질 : 전용씰
6. 사용유체 : 기계 작동유, air, 진공, 절삭유

1. Max. pneumatic operating pressure : 9.9kgf/cm²
2. Max. hydraulic operating pressure : 150kgf/cm²
3. Operating temperature range : 0~70°C
4. Max. RPM : 120rpm
5. Sealing material : Exclusive seal
6. Fluid : hydraulic, air, vacuum, cutting oil

Structure

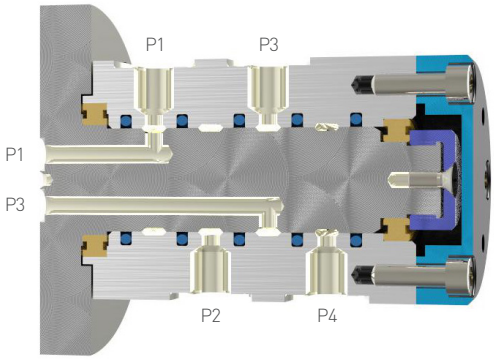

플랜지 타입 로터리 조인트는 탭핑 센터 & 수직 머시닝 센터의 인덱스 픽스쳐와 수평 머시닝 센터의 픽스쳐에 사용하면 편리합니다.

Flange type is convenient to use for index fixture of tapping center & vertical machining center and fixture of horizontal machining center.

Application

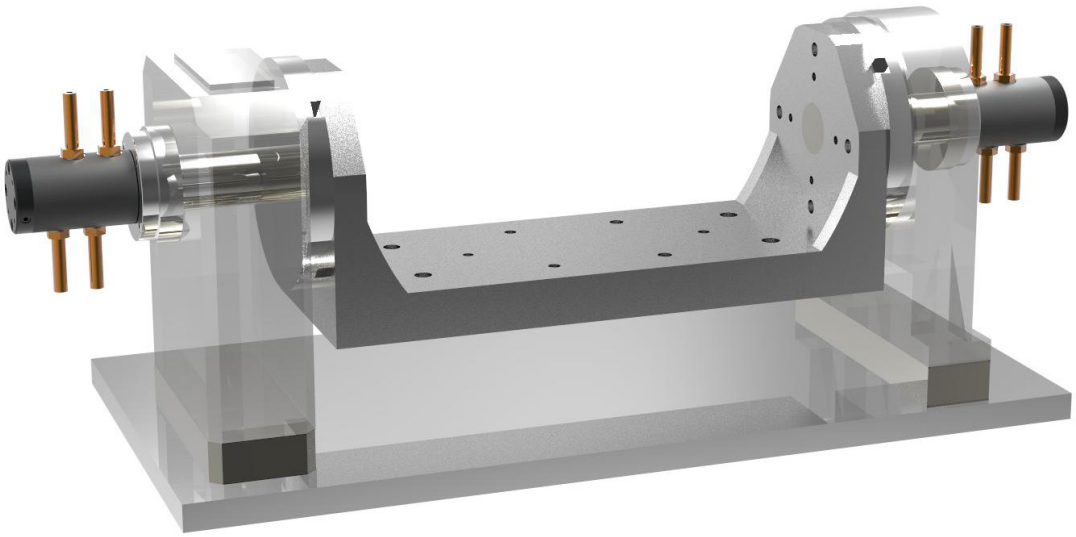

Rotary Joint Flange Type

MODEL NO	RTC-1114G	RTC-3030G
Number of Lines	2	3
Fluid	Hydraulic Oil, Air, Vaccum, Cutting Fluid	
Max. Operating Pressure	150kgf/cm²	
Max. Revolutions per Minute	120rpm	
Operating Temperature Range	0~70°C	
Weight	3.1 kg	3.1 kg

RTC - 1114G

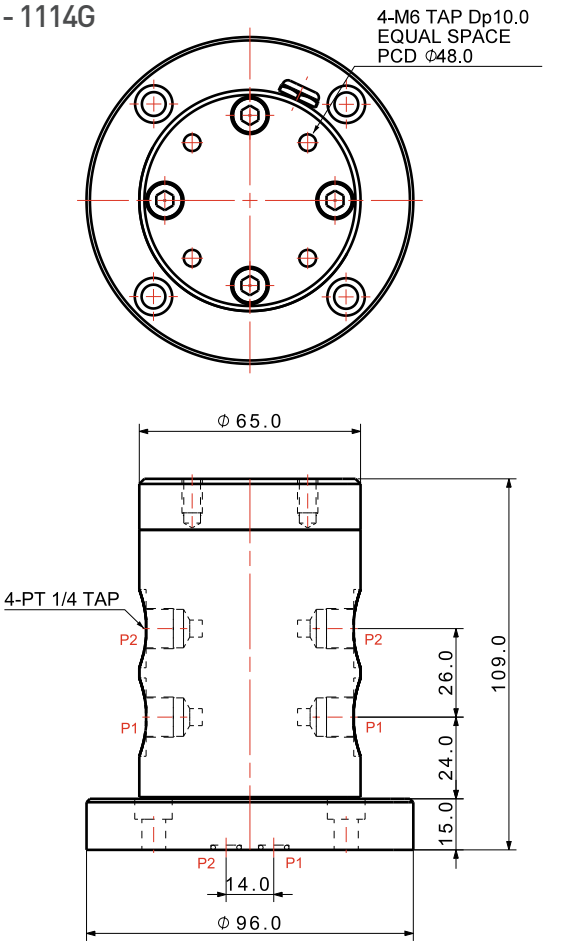

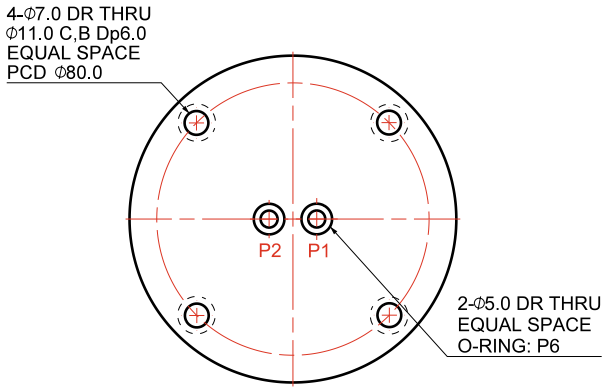

RTC - 3030G

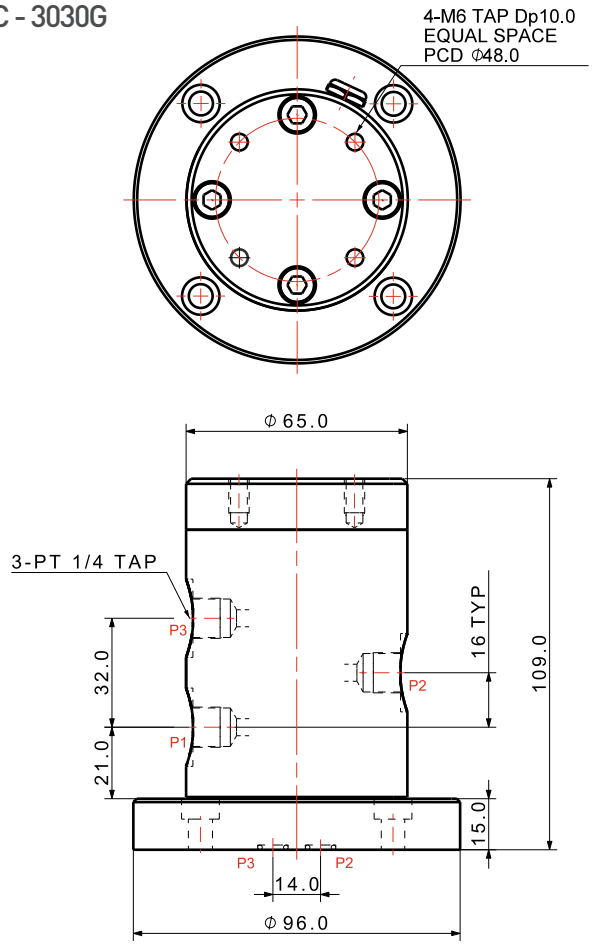

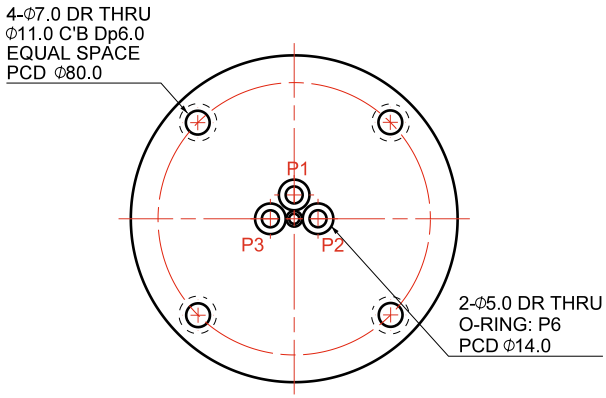

Rotary Joint Flange Type

MODEL NO	RTC-4040G	RTC-5050G
Number of Lines	4	5
Fluid	Hydraulic Oil, Air, Vaccum, Cutting Fluid	
Max. Operating Pressure	150kgf/cm²	
Max. Revolutions per Minute	120rpm	
Operating Temperature Range	0~70°C	
Weight	3.3 kg	4.9 kg

› RTC - 4040G

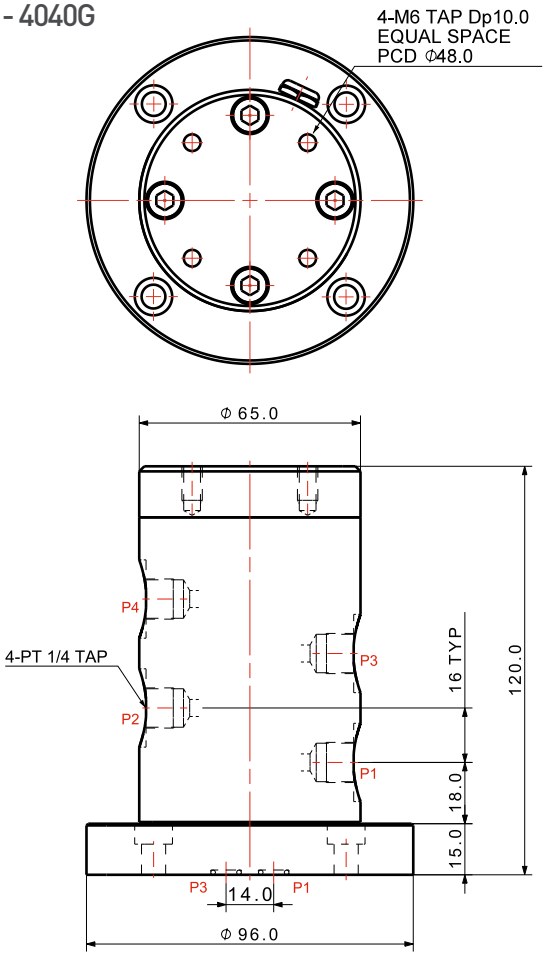

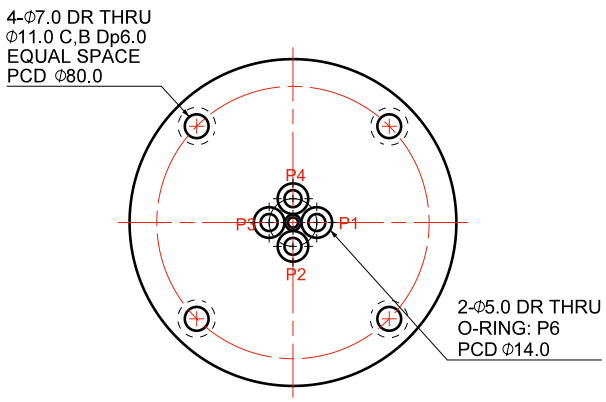

› RTC - 5050G

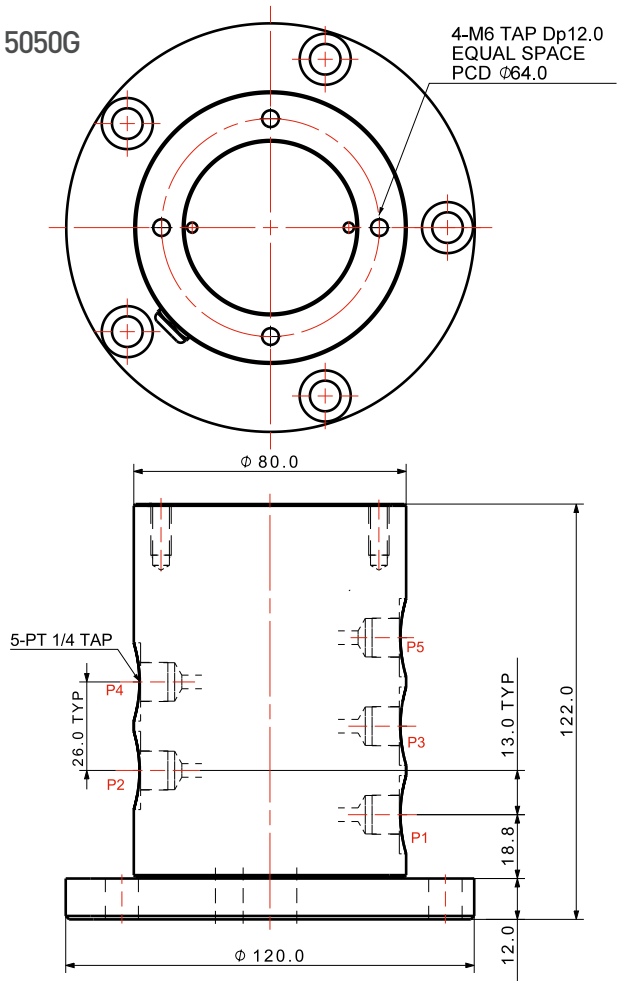

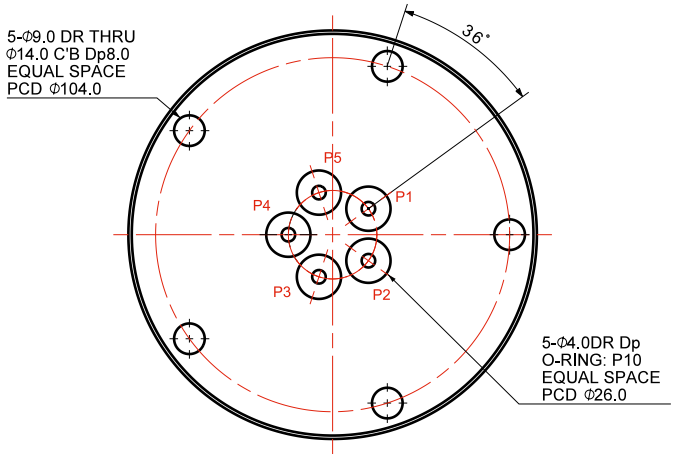

Rotary Joint Flange Type

MODEL NO	RTC-6060G	RTC-8080G
Number of Lines	6	8
Fluid	Hydraulic Oil, Air, Vaccum, Cutting Fluid	
Max. Operating Pressure	150kgf/cm²	
Max. Revolutions per Minute	120rpm	
Operating Temperature Range	0~70°C	
Weight	5.4 kg	6.5 kg

› RTC - 6060G

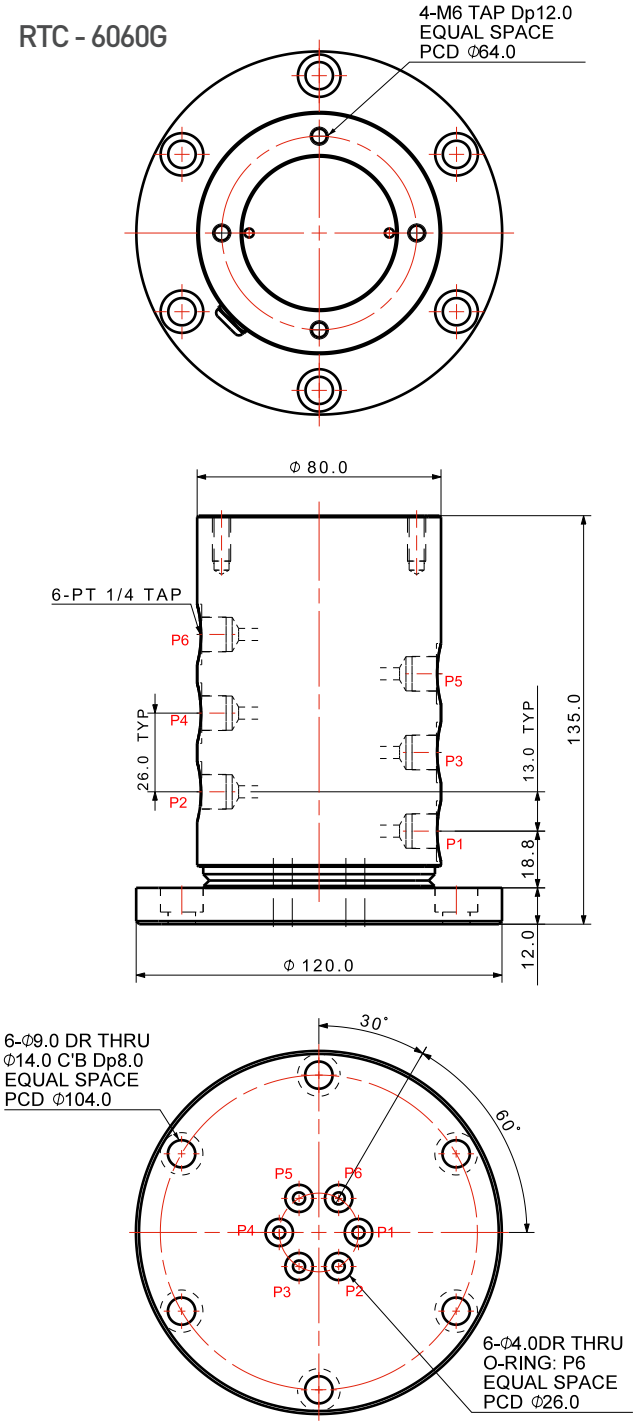

› RTC - 8080G

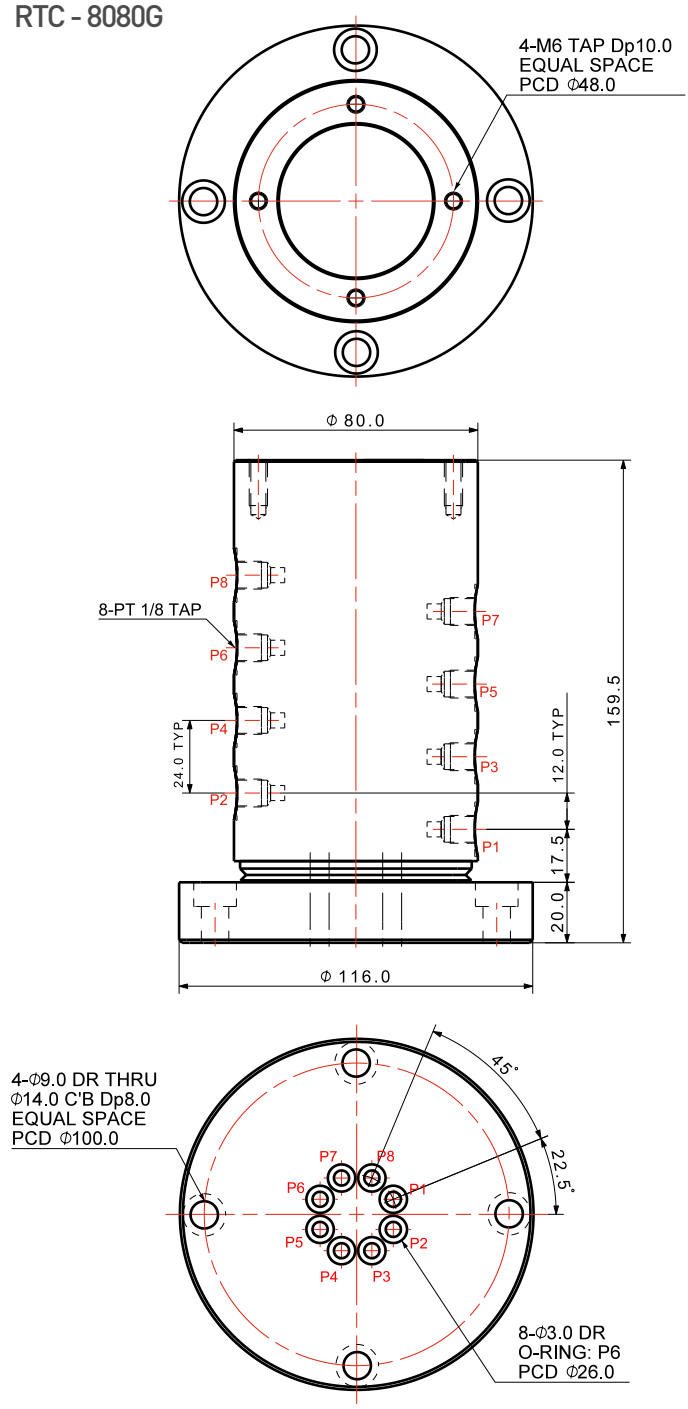

Rotary Joint Cartridge Type

Features

1. 정지된 유압 공급 라인에서 회전하는 유압 부품에 유압을 공급한다.
2. 배관의 꼬임을 방지한다.

1. Rotary joint supply hydraulic to rotating hydraulic components in the stopped hydraulic supply line.
2. It prevents piping twisting.

Specifications

1. 최대 공압 사용압력 : 9.9kgf/cm^2
2. 최대 유압 사용압력 : 150kgf/cm^2
3. 사용온도범위 : 0~70°C
4. 최대 허용 회전수 : 120 rpm
5. 씰 재질 : 전용씰
6. 사용유체 : 기계 작동유, air, 진공, 절삭유

1. Max. pneumatic operating pressure : 9.9kgf/cm^2
2. Max. hydraulic operating pressure : 150kgf/cm^2
3. Operating temperature range : 0~70°C
4. Max. RPM : 120rpm
5. Sealing material : Exclusive seal
6. Fluid : hydraulic, air, vacuum, cutting oil

Structure

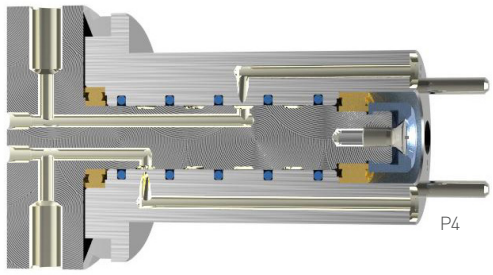

카트리지 타입 로터리 조인트는 인덱스 중공축에 삽입하여 사용하며, 그로 인해 픽스쳐의 전체 길이가 줄어드는 효과를 얻을 수 있습니다. 또한 외부에서 내측으로 볼트를 취부하는 방식이므로 수리시 기준점에 변화를 주지않아 누구나 손쉽게 교체작업이 가능합니다.

The Cartridge type is inserted into the hollow shaft of the index, thereby reducing the overall length of the fixture.
Bolts are mounted from the outside to the inside and there is no change to the reference point during repair for easy replacement.

Application

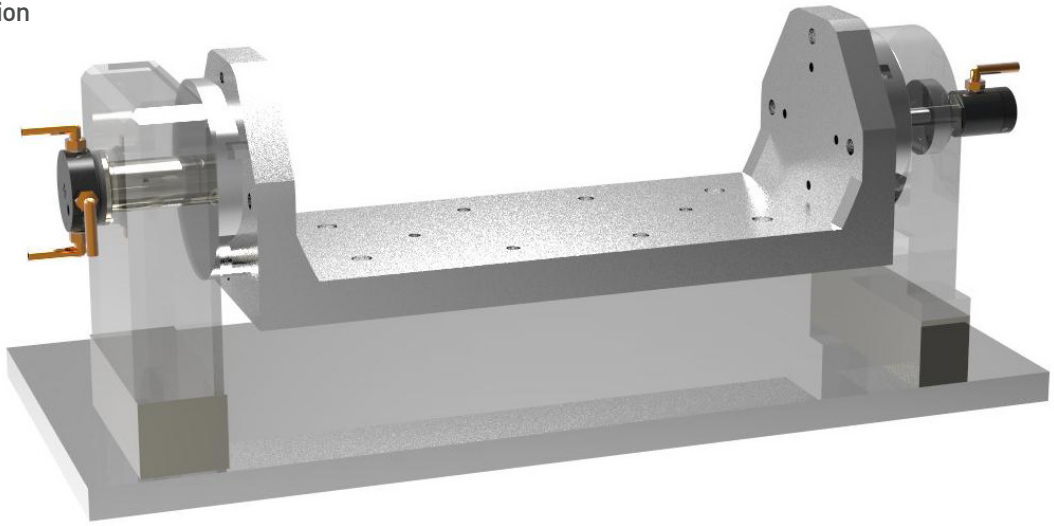

Rotary Joint Cartridge Type

MODEL NO	RTC-4040C	RTC-4045C
Number of Lines	4	4
Fluid	Hydraulic Oil, Air, Vaccum, Cutting Fluid	
Max. Operating Pressure	150kgf/cm²	
Max. Revolutions per Minute	120rpm	
Operating Temperature Range	0~70°C	
Weight	1.3 kg	1.4 kg

› RTC - 4040C

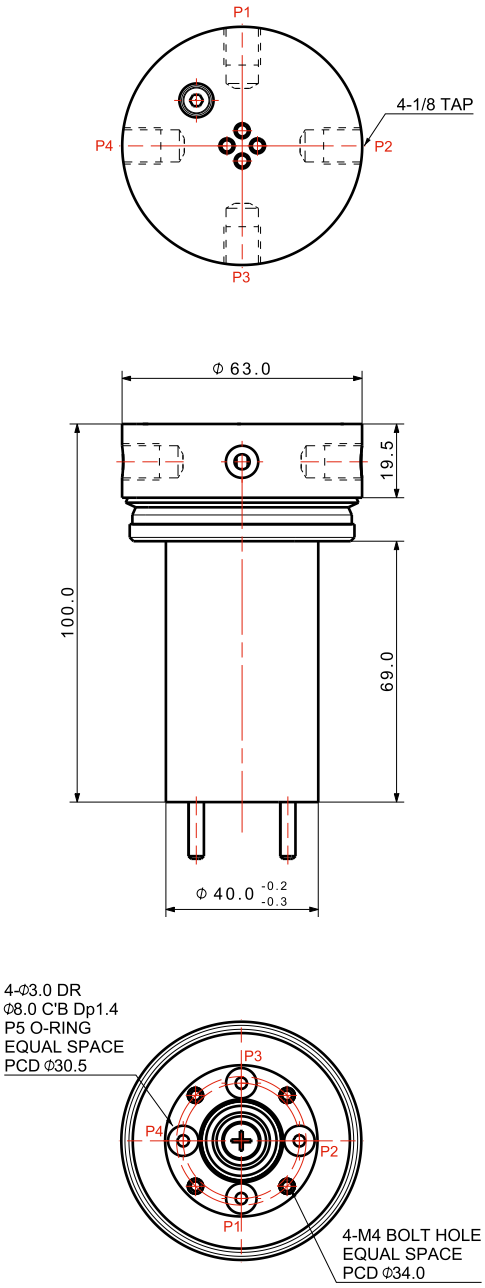

› RTC - 4045C

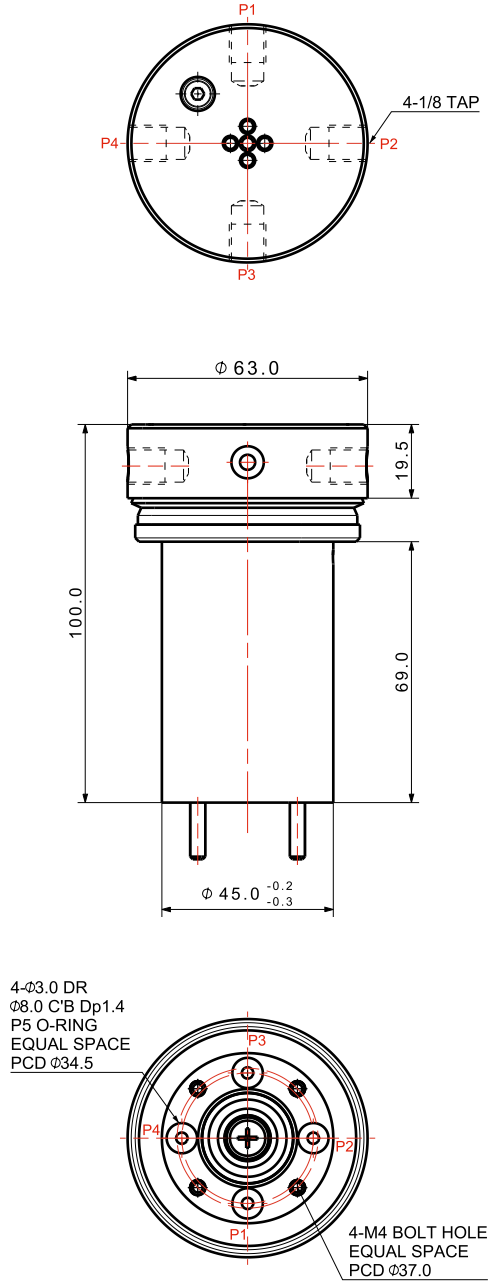

Rotary Joint Cartridge Type

MODEL NO	RTC-5055C	RTC-6055C
Number of Lines	5	6
Fluid	Hydraulic Oil, Air, Vaccum, Cutting Fluid	
Max. Operating Pressure	150kgf/cm²	
Max. Revolutions per Minute	120rpm	
Operating Temperature Range	0~70°C	
Weight	2.23 kg	2.41 kg

› RTC - 5055C

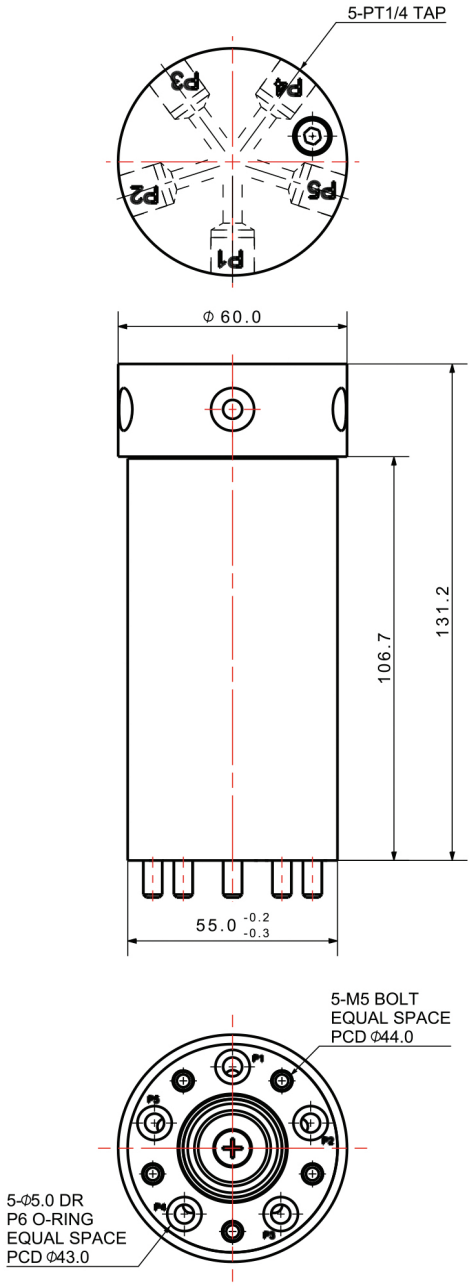

› RTC - 6055C

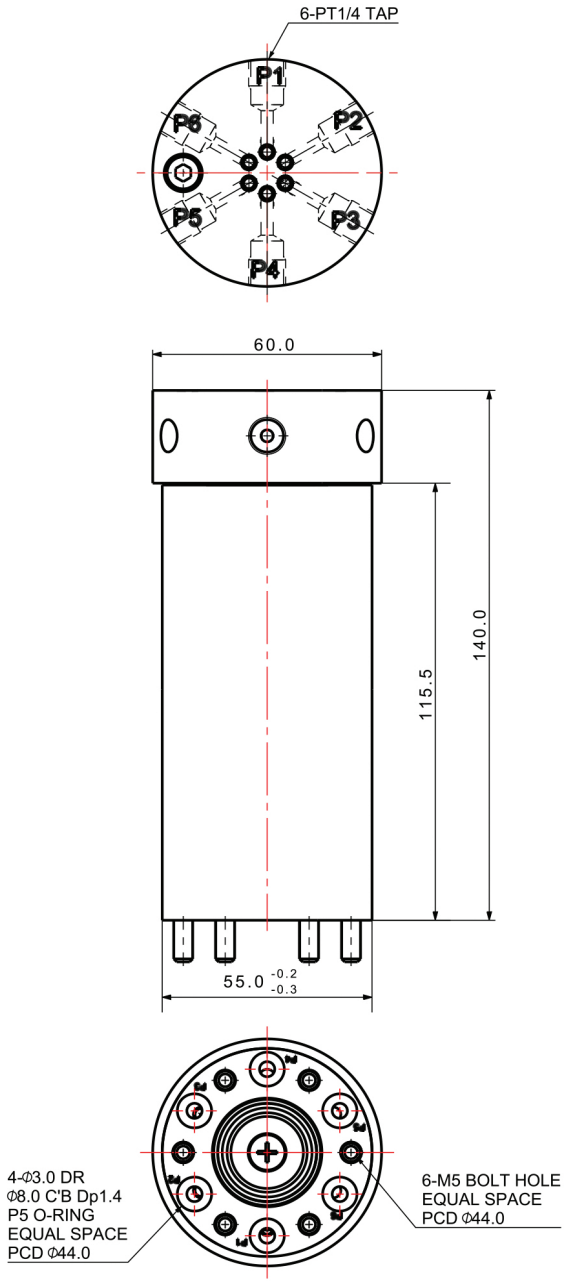

Rotary Joint Cartridge Type

MODEL NO	RTC-5070C	RTC-8070C
Number of Lines	5	8
Fluid	Hydraulic Oil, Air, Vaccum, Cutting Fluid	
Max. Operating Pressure	150kgf/cm²	
Max. Revolutions per Minute	120rpm	
Operating Temperature Range	0~70°C	
Weight	3.79 kg	4.58 kg

› RTC-5070C

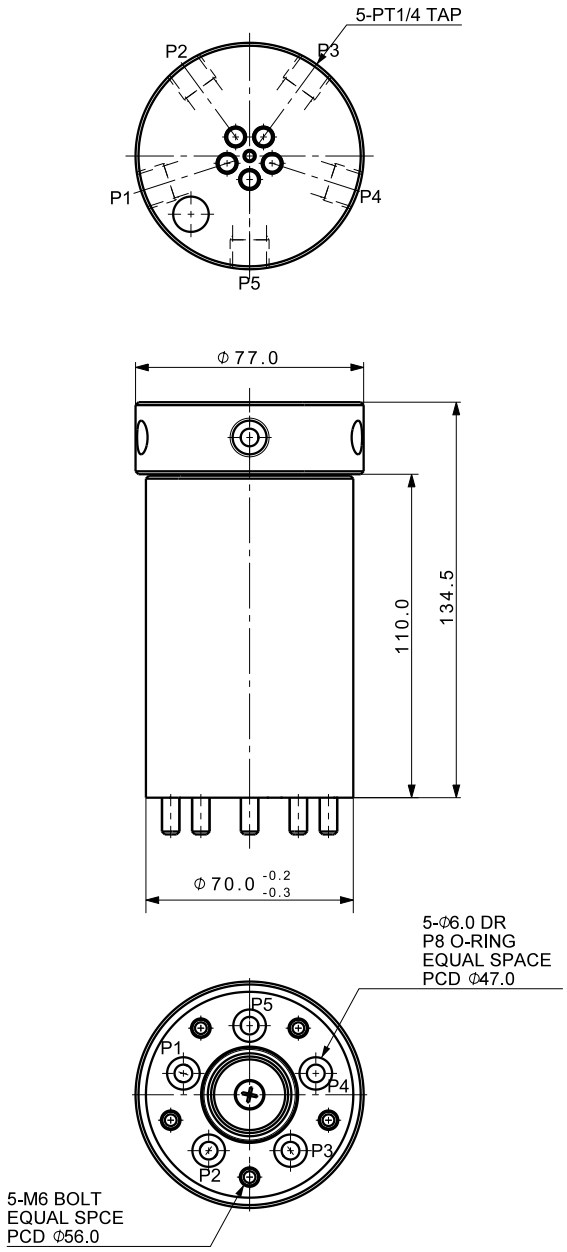

› RTC-8070C

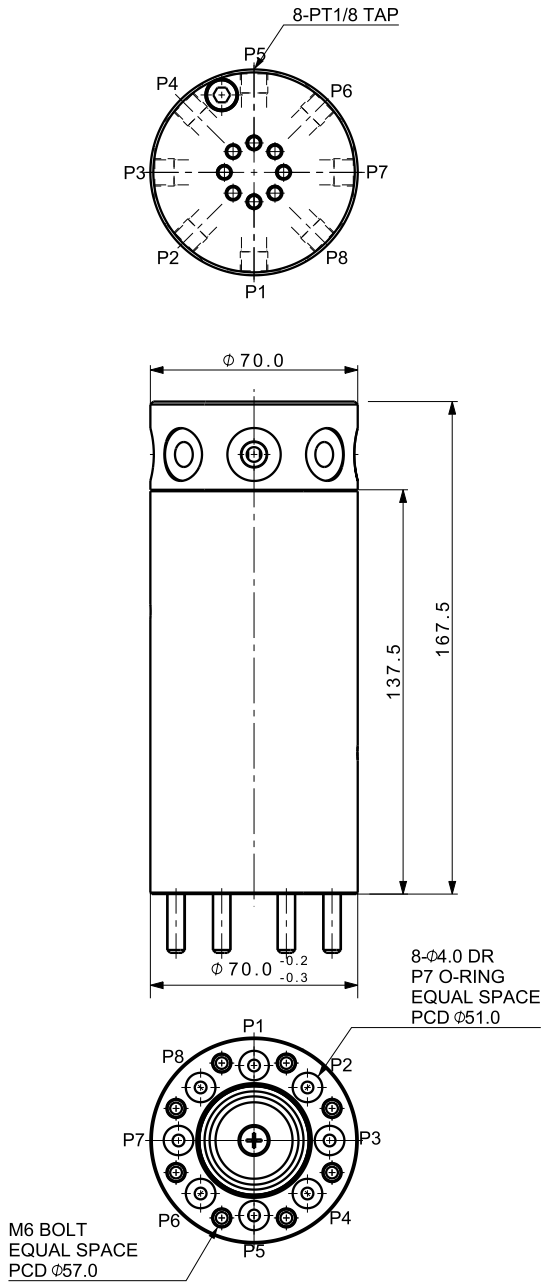

Rotary Joint Compact Flange Type

Features

1. 정지된 유압 공급 라인에서 회전하는 유압 부품에 유압을 공급한다.
2. 배관의 꼬임을 방지한다.
3. 컴팩트한 사이즈로 수평 픽스쳐에 설치가 용이

1. Provides hydraulic to rotating hydraulic parts from fixed hydraulic line.
2. Prevents twisted lines.
3. It is compact and easy to install in horizontal fixture.

Specifications

1. 최대 공압 사용압력 : 9.9kgf/cm^2
2. 최대 유압 사용압력 : 100kgf/cm^2
3. 사용온도범위 : 0~70°C
4. 최대 허용 회전수 : 120 rpm
5. 씰 재질 : 전용씰
6. 사용유체 : 기계 작동유, air, 진공, 절삭유

1. Max. pneumatic operating pressure : 9.9kgf/cm^2
2. Max. hydraulic operating pressure : 100kgf/cm^2
3. Operating temperature range : 0~70°C
4. Max. RPM : 120rpm
5. Sealing material : Exclusive seal
6. Fluid : hydraulic, air, vacuum, cutting oil

Structure

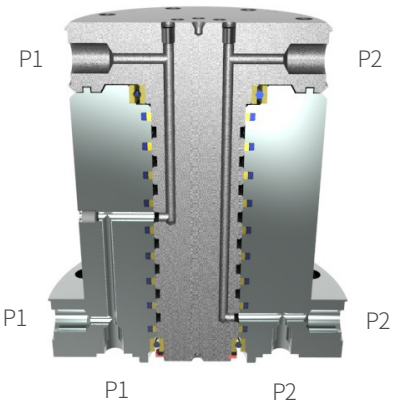

컴팩트 플랜지 타입 로터리 조인트는 공간 차지를 최소화하고 수평 머시닝 센터의 픽스쳐에 사용하면 편리합니다.

Compact flange type minimizes space occupancy and is convenient to use for fixture of vertical machining center.

Application

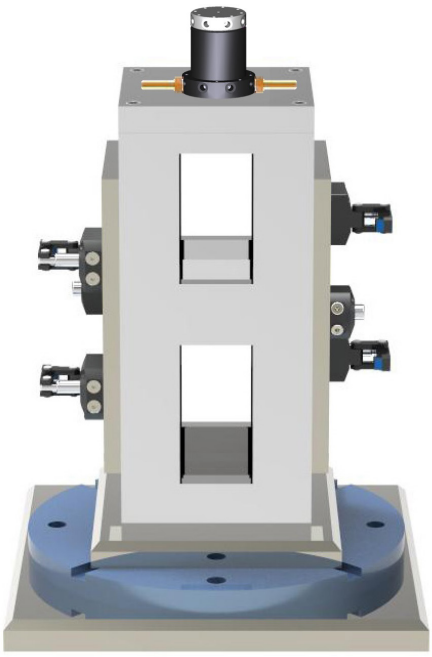

Rotary Joint Compact Flange Type

MODEL NO	RTC-020	RTC-040
Number of Lines	2	4
Fluid	Hydraulic Oil, Air, Vaccum, Cutting Fluid	
Max. Operating Pressure	100kgf/cm²	
Max. Revolutions per Minute	120rpm	
Operating Temperature Range	0~70°C	
Weight	4.36 kg	5.34 kg

› RTC - 020

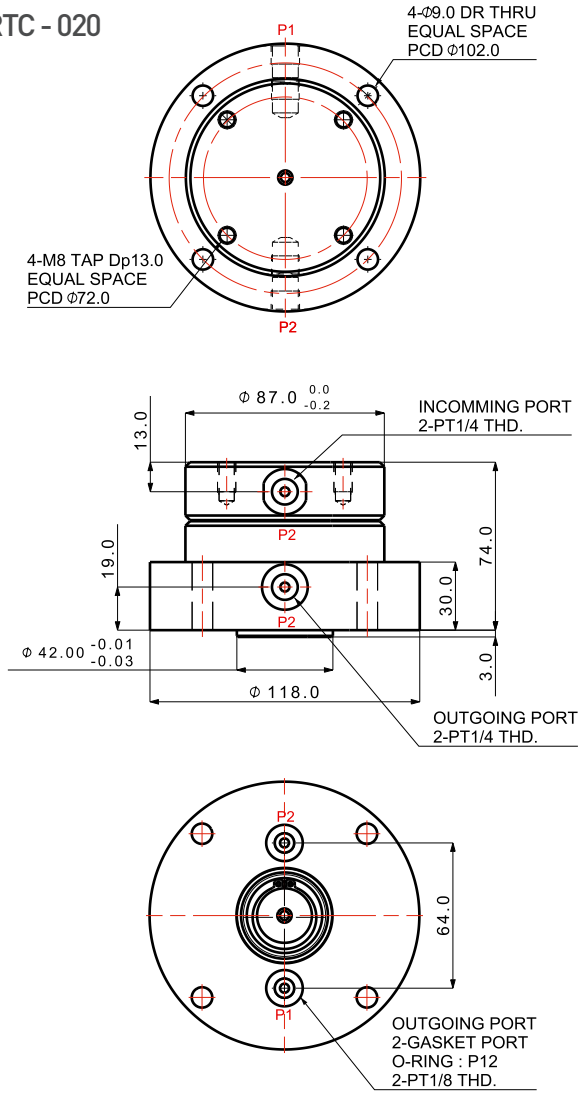

› RTC - 040

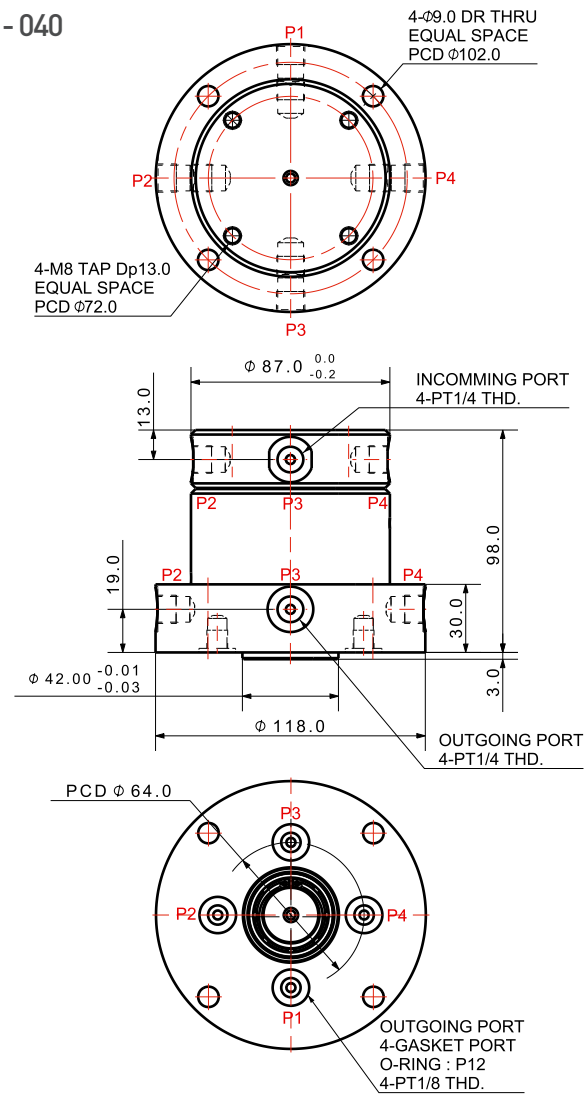

Compact Rotary Joint Compact Flange Type

MODEL NO	RTC-060	RTC-080
Number of Lines	6	8
Fluid	Hydraulic Oil, Air, Vaccum, Cutting Fluid	
Max. Operating Pressure	100kgf/cm²	
Max. Revolutions per Minute	120rpm	
Operating Temperature Range	0~70°C	
Weight	7.75 kg	8.98 kg

› RTC - 060

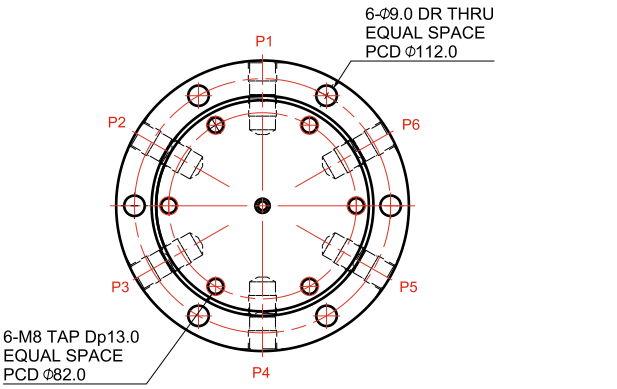

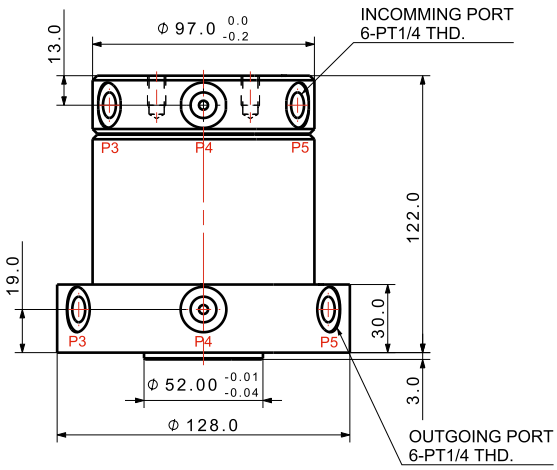

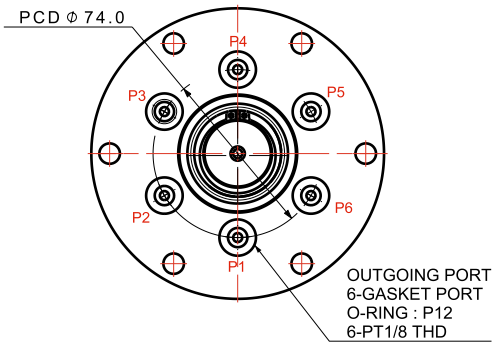

› RTC - 080

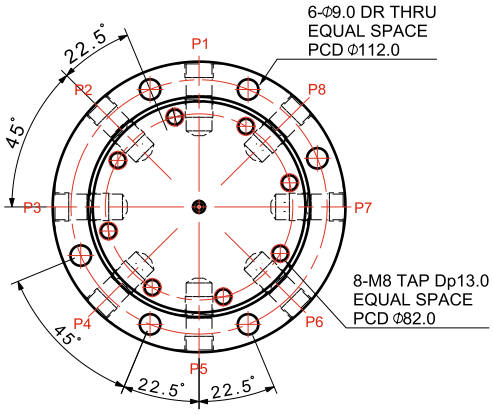

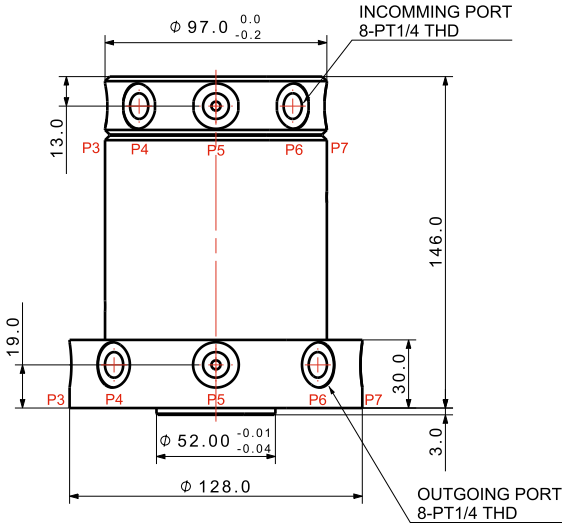

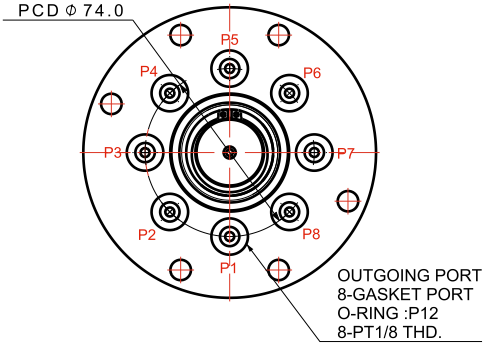

Compact Rotary Joint Compact Flange Type

MODEL NO	RTC-120	RTC-160
Number of Lines	12	16
Fluid	Hydraulic Oil, Air, Vaccum, Cutting Fluid	
Max. Operating Pressure	100kgf/cm^2	
Max. Revolutions per Minute	120rpm	
Operating Temperature Range	0~70°C	
Weight	18.56 kg	24.88 kg

› RTC - 120

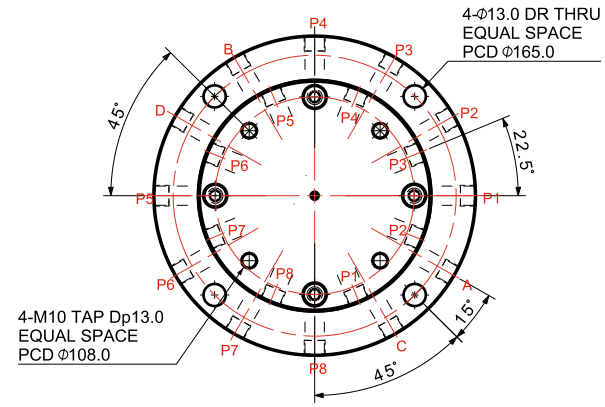

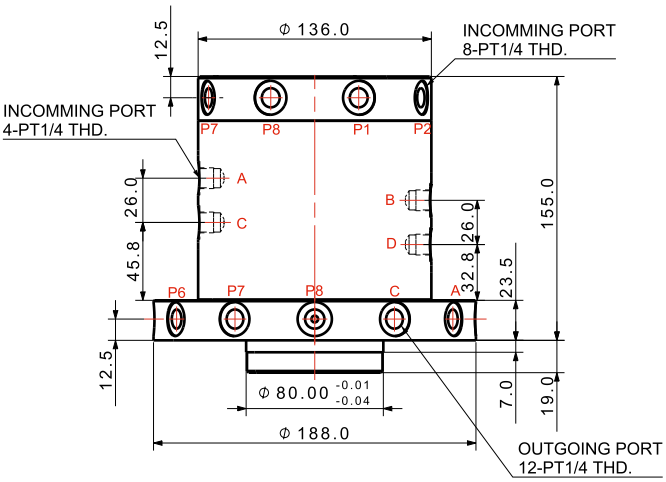

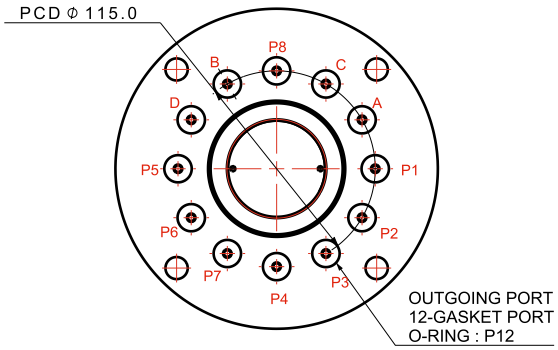

› RTC - 160

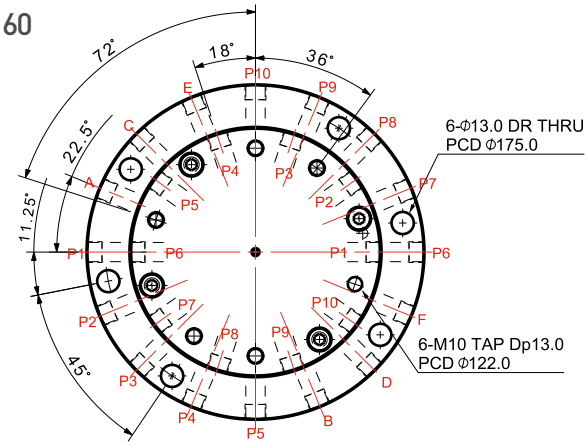

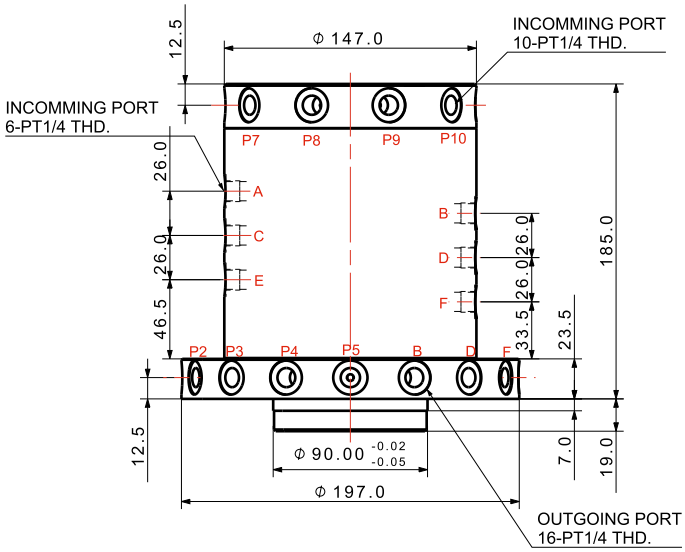

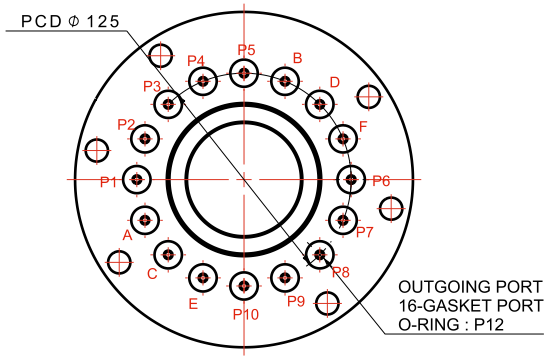

Rotary Joint Top Type

Features

1. 정지된 유압 공급 라인에서 회전하는 유압 부품에 유압을 공급한다.
2. 배관의 꼬임을 방지한다.

1. Rotary joint supply hydraulic to rotating hydraulic components in the stopped hydraulic supply line.
2. It prevents piping twisting.

Specifications

1. 최대 공압 사용압력 : 9.9kgf/cm^2
2. 최대 유압 사용압력 : 150kgf/cm^2
3. 사용온도범위 : 0~70°C
4. 최대 허용 회전수 : 120 rpm
5. 씰 재질 : 전용씰
6. 사용유체 : 기계 작동유, air, 진공, 절삭유

1. Max. pneumatic operating pressure : 9.9kgf/cm^2
2. Max. hydraulic operating pressure : 150kgf/cm^2
3. Operating temperature range : 0~70°C
4. Max. RPM : 120rpm
5. Sealing material : Exclusive seal
6. Fluid : hydraulic, air, vacuum, cutting oil

Structure

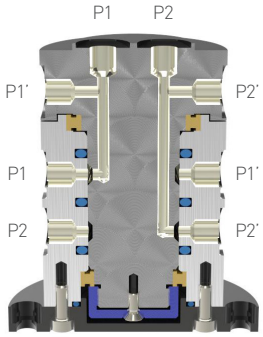

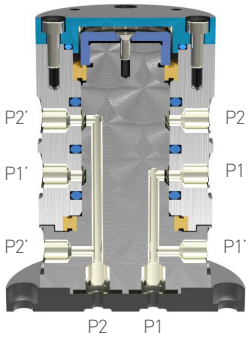

탑 타입 로터리 조인트는 인덱스 테이블을 이용한 조립 또는 가공전용기에 사용하기 편리하며 또한 수평 머시닝 센터의 픽스쳐에 사용하기도 편리합니다.

It is useful for exclusive processing machine or assembly with index table as well as fixture of horizontal machining center.

Application

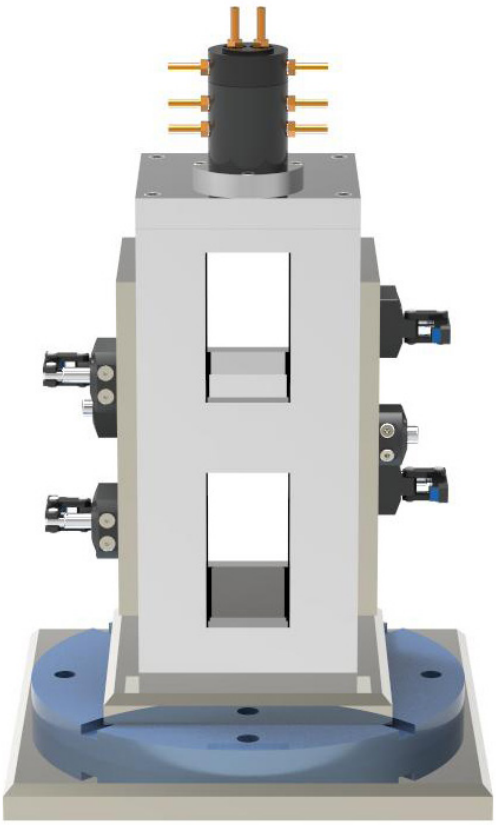

Rotary Joint Top Type

MODEL NO	RTC-2020	RTC-2020S
Number of Lines	2	2
Fluid	Hydraulic Oil, Air, Vaccum, Cutting Fluid	
Max. Operating Pressure	150kgf/cm²	
Max. Revolutions per Minute	120rpm	
Operating Temperature Range	0~70°C	
Weight	5.0 kg	5.5 kg

RTC - 2020

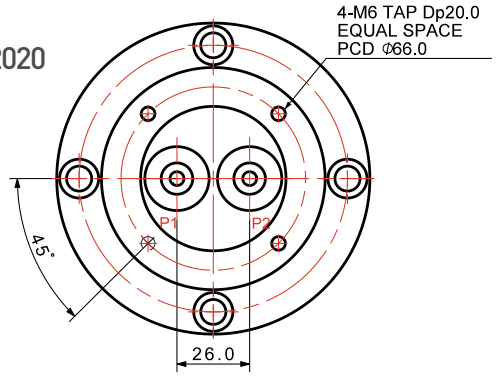

RTC - 2020S

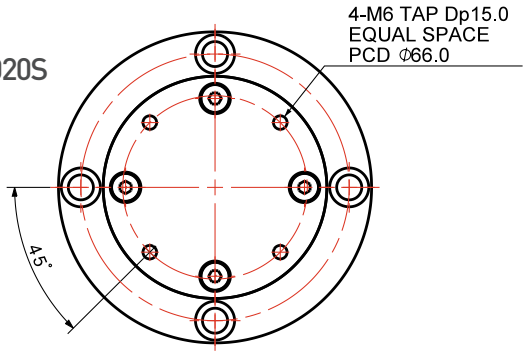

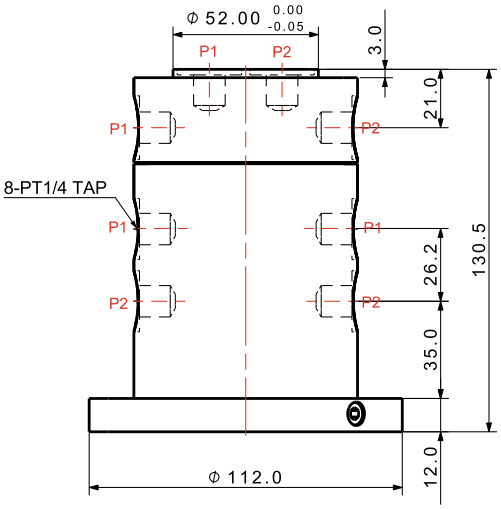

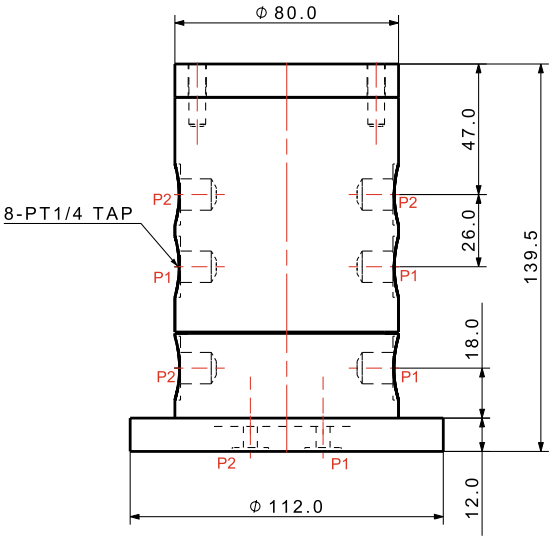

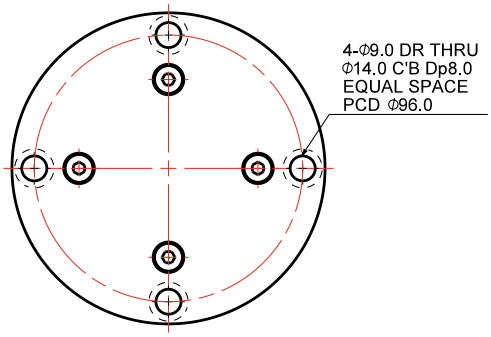

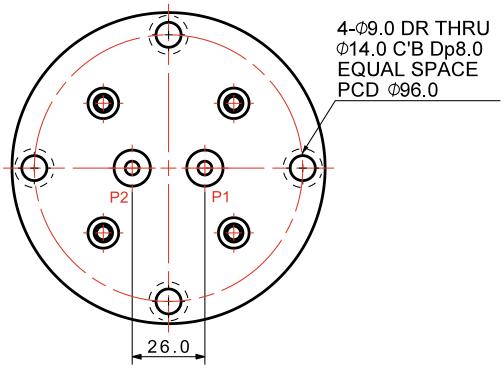

Rotary Joint Male Type

Features

1. 정지된 유압 공급 라인에서 회전하는 유압 부품에 유압을 공급한다.
2. 배관의 꼬임을 방지한다.

1. Rotary joint supply hydraulic to rotating hydraulic components in the stopped hydraulic supply line.
2. It prevents piping twisting.

Specifications

1. 최대 공압 사용압력 : 9.9kgf/cm²
2. 최대 유압 사용압력 : 150kgf/cm²
3. 사용온도범위 : 0~70°C
4. 최대 허용 회전수 : 120 rpm
5. 씰 재질 : 전용씰
6. 사용유체 : 기계 작동유, air, 진공, 절삭유

1. Max. pneumatic operating pressure : 9.9kgf/cm²
2. Max. hydraulic operating pressure : 150kgf/cm²
3. Operating temperature range : 0~70°C
4. Max. RPM : 120rpm
5. Sealing material : Exclusive seal
6. Fluid : hydraulic, air, vacuum, cutting oil

Structure

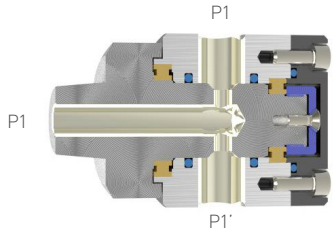

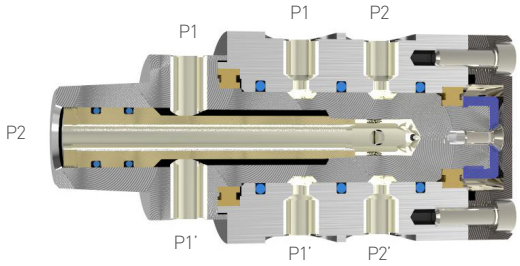

메일 타입 로터리 조인트는 설치 할 위치에 PT 탭으로 고정합니다.

The male type should be secured with PT tap to the installation location.

Application

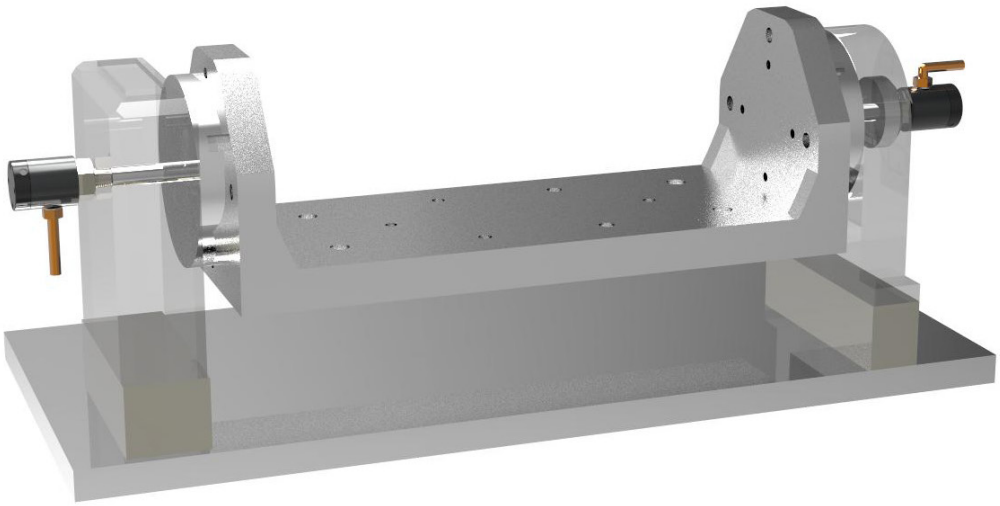

Rotary Joint Male Type

MODEL NO	RTC-3814	RTC-3412
Number of Lines	1	1
Fluid	Hydraulic Oil, Air, Vaccum, Cutting Fluid	
Max. Operating Pressure	150kgf/cm²	
Max. Revolutions per Minute	120rpm	
Operating Temperature Range	0~70°C	
Weight	0.55 kg	1.93 kg

› RTC - 3814

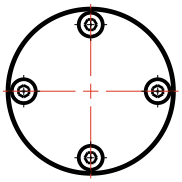

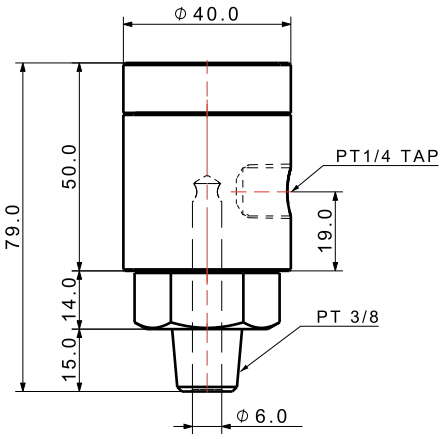

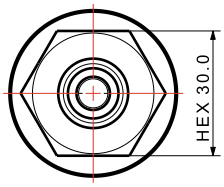

› RTC - 3412

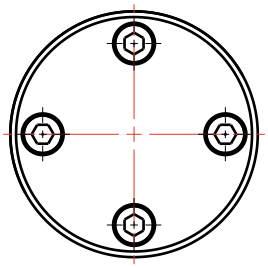

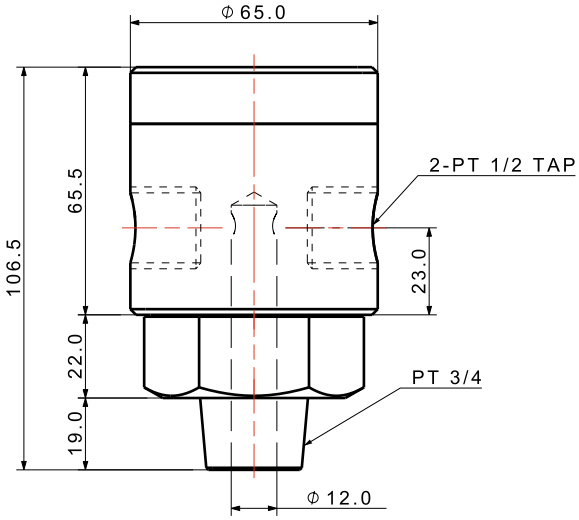

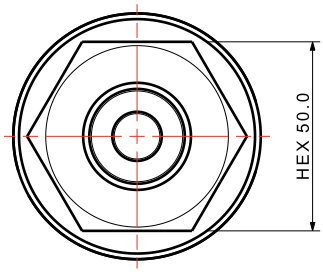

Rotary Joint Male Type

MODEL NO	RTC-3414	RTC-1014
Number of Lines	2	2
Fluid	Hydraulic Oil, Air, Vaccum, Cutting Fluid	
Max. Operating Pressure	150kgf/cm²	
Max. Revolutions per Minute	120rpm	
Operating Temperature Range	0~70°C	
Weight	2.7 kg	2.7 kg

› RTC-3414

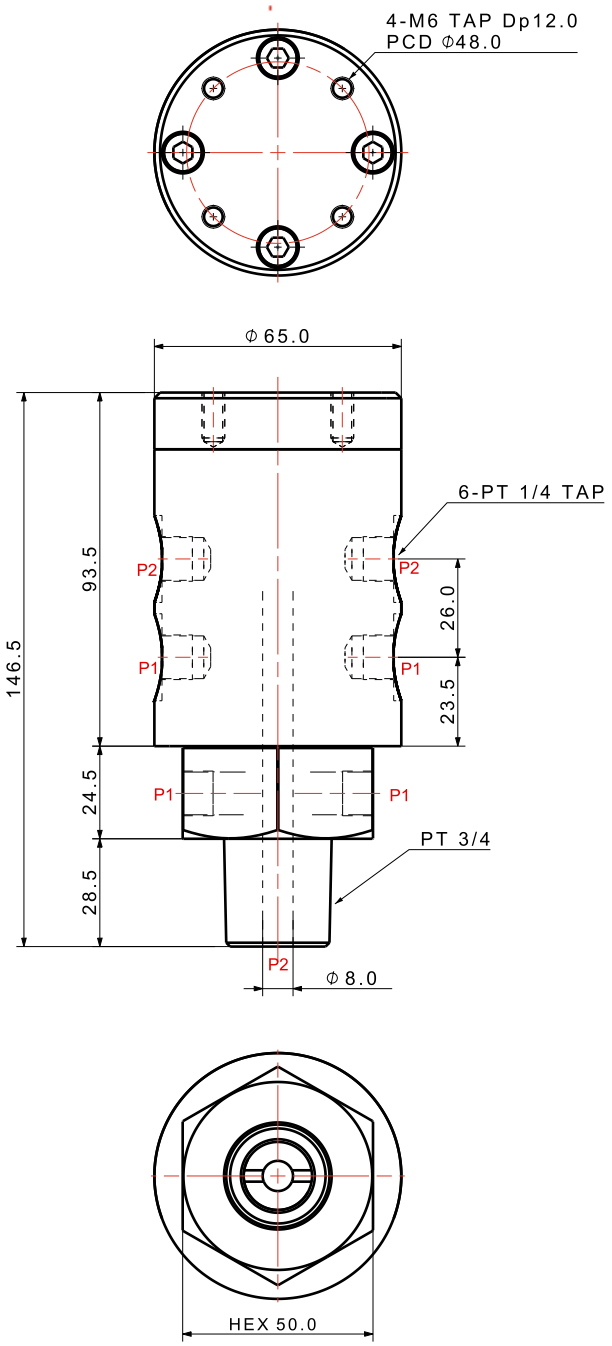

› RTC-1014

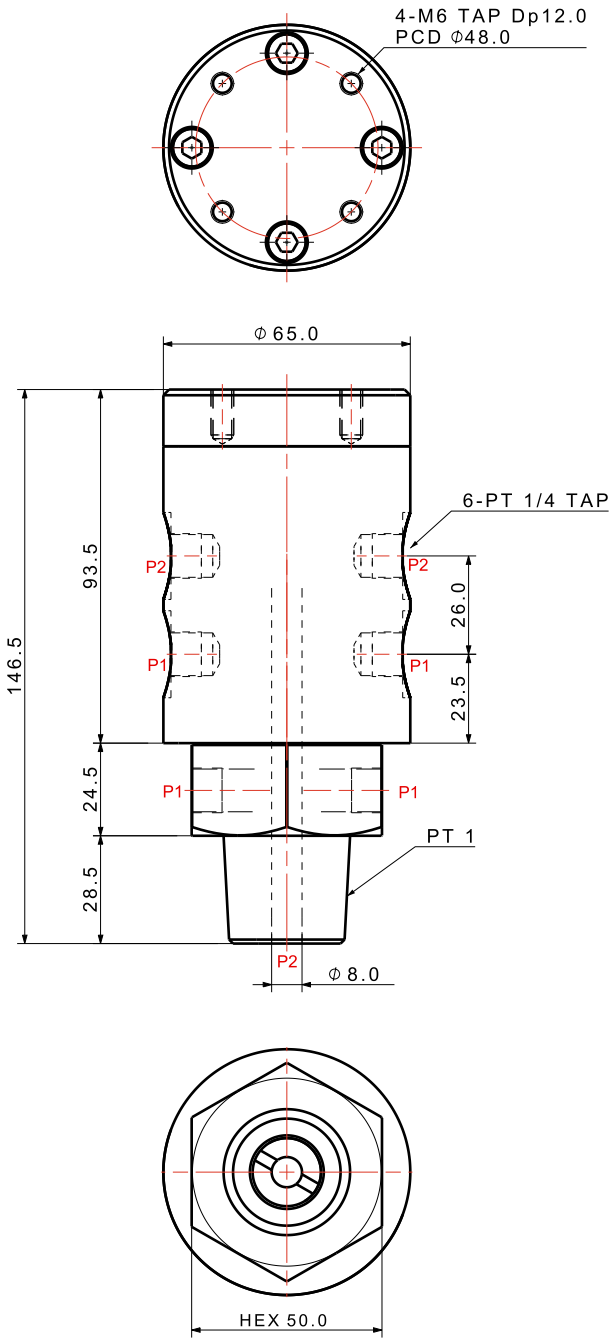

Rotary Joint

사용할 때 주의할 점 Comments and cautions for operation

1. 로터리 조인트를 설치할 때 로터리와 하우징의 중심을 일치시키는 것이 매우 중요합니다.

1. It is very important to match the center of rotary and housing when installing rotary joint.

A. 로터리 조인트를 설치할 때, 회전부품은 견고하게 고정하고 회전하지 않는 부품은 느슨하게 고정해서, 회전하는 부품을 회전하지 않는 부품이 자연스럽게 따라 움직이도록 해야 합니다. (아래 그림 참조)

A. When installing a rotary joint, the rotating component should be fixed firmly and the non-rotating component should be loosely fastened. In doing so, the rotating components should move naturally following non-rotating components.

B. 배관시 회전하는 부품에는 스틸 파이프로 배관해도 무관하지만, 회전하지 않는 부품은 반드시 여유 있는 길이의 호스로 배관해야만 합니다.

B. Parts that rotate during piping may be connected with steel pipes, but parts that do not rotate must be connected with a hose of sufficient length.

C. 회전하지 않는 부품이 따라 돌지않게 블라켓을 설치할 때도, 느슨하게 묶어서 회전하지 않는 부품이 회전하는 부품을 자연스럽게 따라 움직이는데 방해되지 않도록 해야합니다. (아래 그림 참조)

C. When installing the bracket to prevent rotation of non-rotating components following rotating components, the bracket should be fastened loosely so as not to interfere with the natural movement of the rotating components.

2. 로터리 조인트를 연속 회전시키면, SEAL의 마찰에 의해 열이 발생하므로 열을 식히는 방안을 강구하든지, 단속적으로 회전하는 경우에 사용이 적합합니다.

2. When rotary joint is continuously rotating, heat is generated by the friction of seal. Therefore, provide a measure to cool the heat or use in case of intermittent rotation.

3. 인덱스를 이용하여 회전시킬 때, 처음 토크를 참조하여 모터를 선정하십시요.

3. When using the index to rotate, select the motor referring to the first torque.

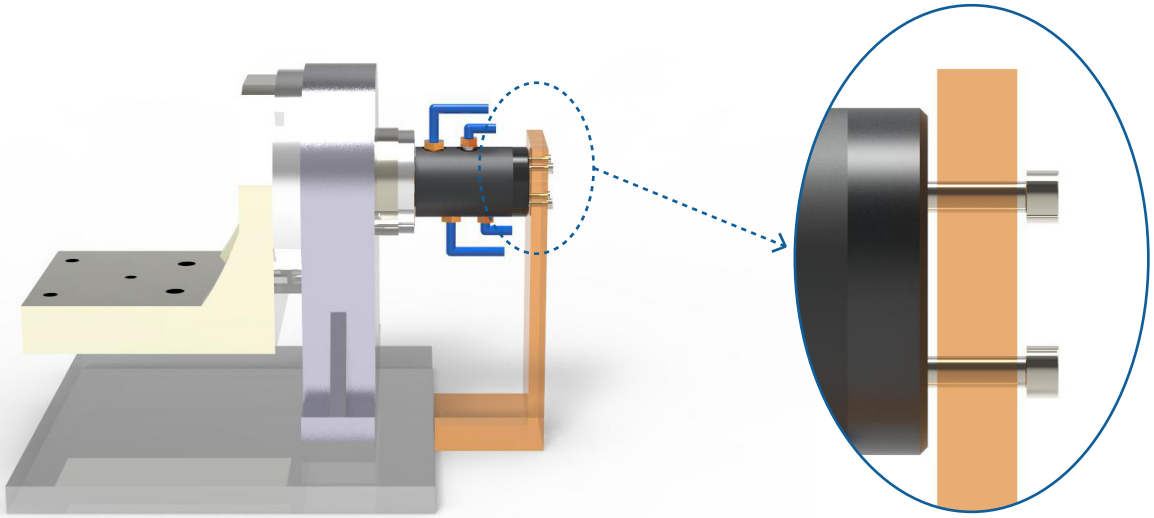

Rotary Distributors Valve

Application

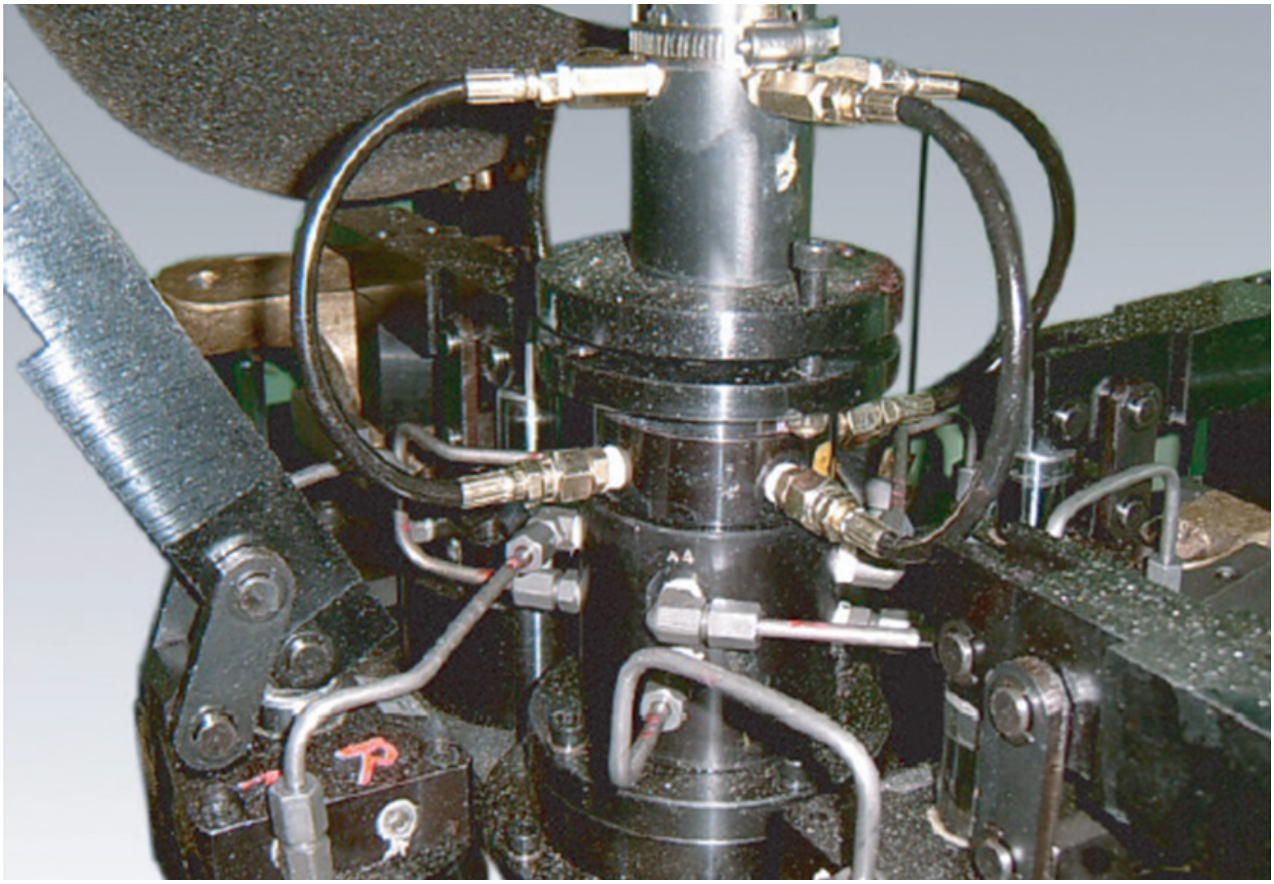

Circuit Diagram

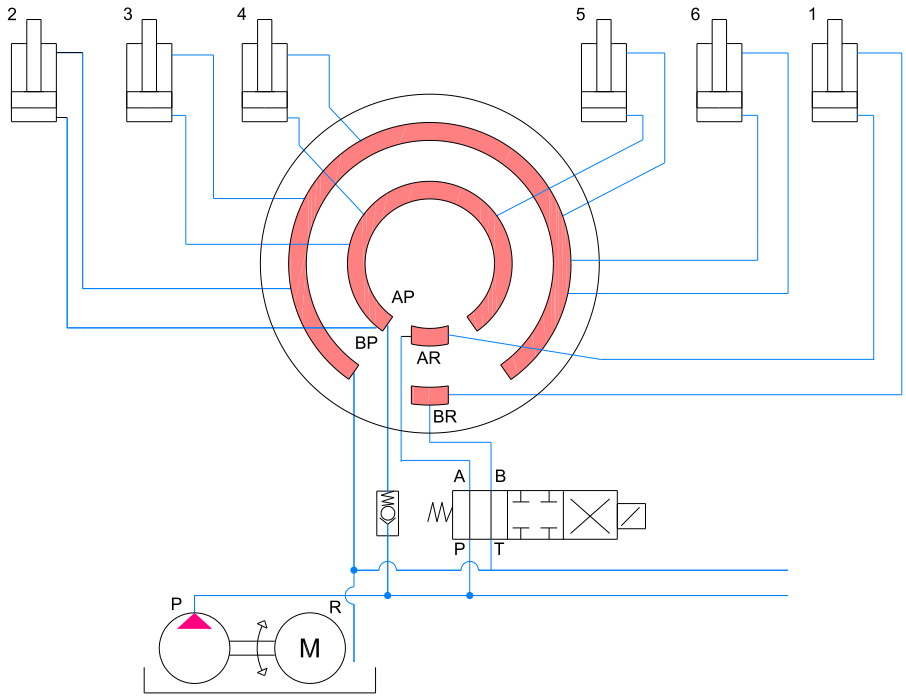

Rotary Distributors Valve

Features

1. 로터리 조인트에 분배기능과 밸브기능을 추가한 제품으로 로터리 테이블을 이용한 전용기를 제작할 때 활용하면 매우 편리하다.
2. 주문생산품이다.

1. Distribution and valve functions added to rotary joint and it is very convenient to use when making a dedicated machine using rotary table.
2. Custom-made.

Specifications

1. 작동 압력 : 5~200kgf/cm^2
2. 사용 온도 : 0~60°C
3. 씰의 재료 : 전용씰

1. Operating Pressure : 5~200kgf/cm^2
2. Operating Temperature : 0~60°C
3. Seal Material : Exclusive seal

› RDV - XX 20
①

① Number of Stations

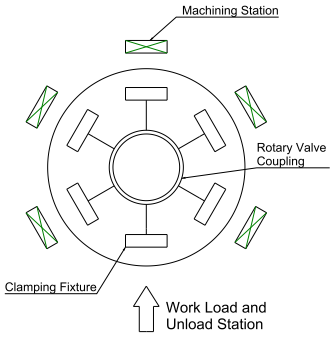

주의사항 Caution

완전히 고정하지 말 것.
구멍을 크게 가공하여
움직일 수 있게 할 것.
회전시 힘만 잡아주면 됨.

Do not tighten fully.
Make holes large enough to move.
Only strength requires control when rotating.

간격을 주어서 움직일 수 있도록 할 것.

Spacing is required to ensure movement.

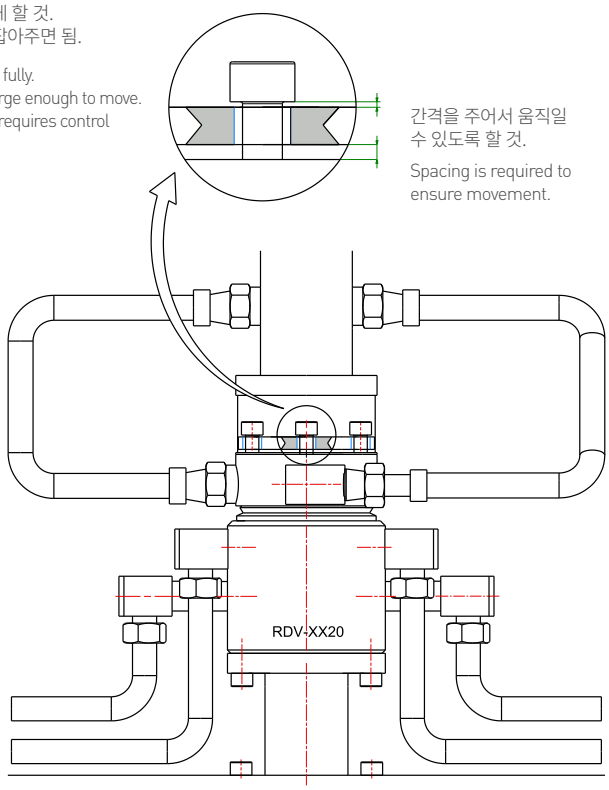

Index Table

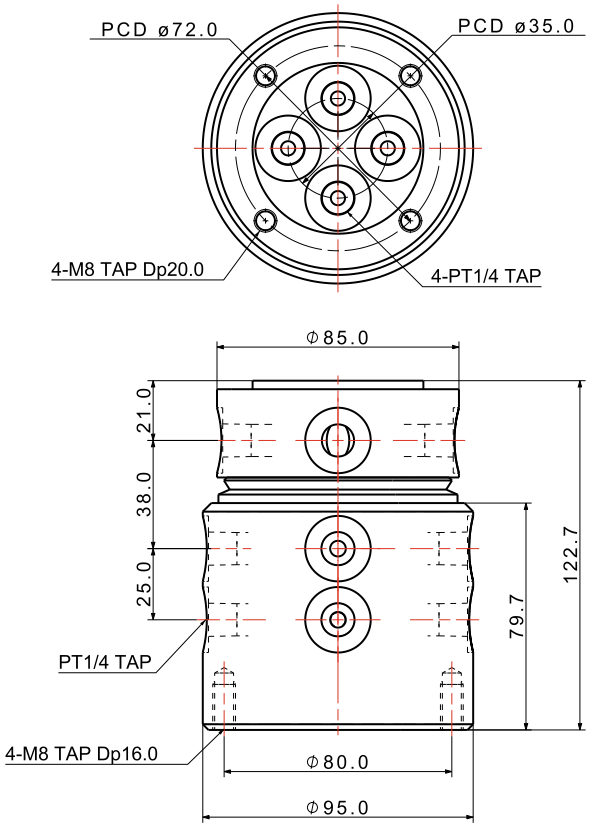

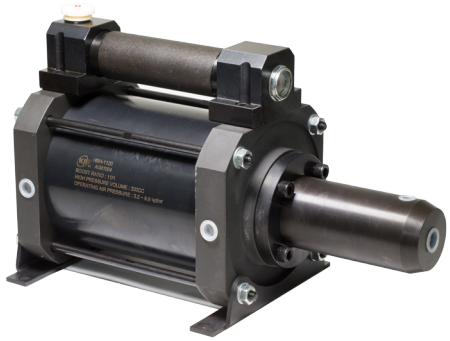

Booster (Air-Hydraulic Power)

Features

1. 저압의 공기압으로 손쉽게 고압의 유압을 얻을 수 있다.
2. 유압 출력을 이용함에 따라 항시 균등하고 확실한 힘을 얻을 수 있다.
3. 소형 경량이며 저렴한 가격으로 유압원을 얻을 수 있어 간이 자동화에 쉽게 적용할 수 있다.

1. High oil pressure can be easily obtained with low pneumatic pressure.
2. Uniform and reliable power can be obtained at all times by using the hydraulic output.
3. It can be easily applied to simple automation because it is small and light and can obtain hydraulic source at a low price.

Installation

1. 부스터는 에어 빼기를 용이하게 하기 위하여 유압 실린더 및 배관보다 높게 설치한다.
2. 수평위치로 설치하며 특별한 경우에는 수직으로 설치할 수 있다.
3. 유압배관은 굵고 짧게 한다.
4. 에어 방향전환 밸브 전에 에어필터, 루브리케이터, 레귤레이터를 설치한다.

1. Booster is installed higher than hydraulic cylinders and piping to facilitate air removal.
2. The unit should be installed horizontally, but in special cases, it can be installed vertically.
3. Hydraulic piping should be thick and short.
4. Air filter, lubricator and regulator should be installed before air direction valve installation.

Specification

MODEL NO.	Boost Ratio	High Pressure Volume	Operating Air Pressure	Output Pressure	Weight
HBH-1108	11 : 1	80cc	3.2~9.9kgf/cm²	35~109kgf/cm²	26kg
HBH-1120	11 : 1	200cc		35~109kgf/cm²	32kg
HBH-2212	22 : 1	120cc		70~217kgf/cm²	32kg
HBH-3608	36 : 1	80cc		115~356kgf/cm²	32kg

Dimensions

MODEL NO.	DIMENSIONS (mm)									
	A	B	C	øD	E	F	G	H	J	K
HBH-1108	272	177	143	70	220	200	179	255.5	190	100
HBH-1120	421	254	220	70						
HBH-2212	473	280	246	55						
HBH-3608										

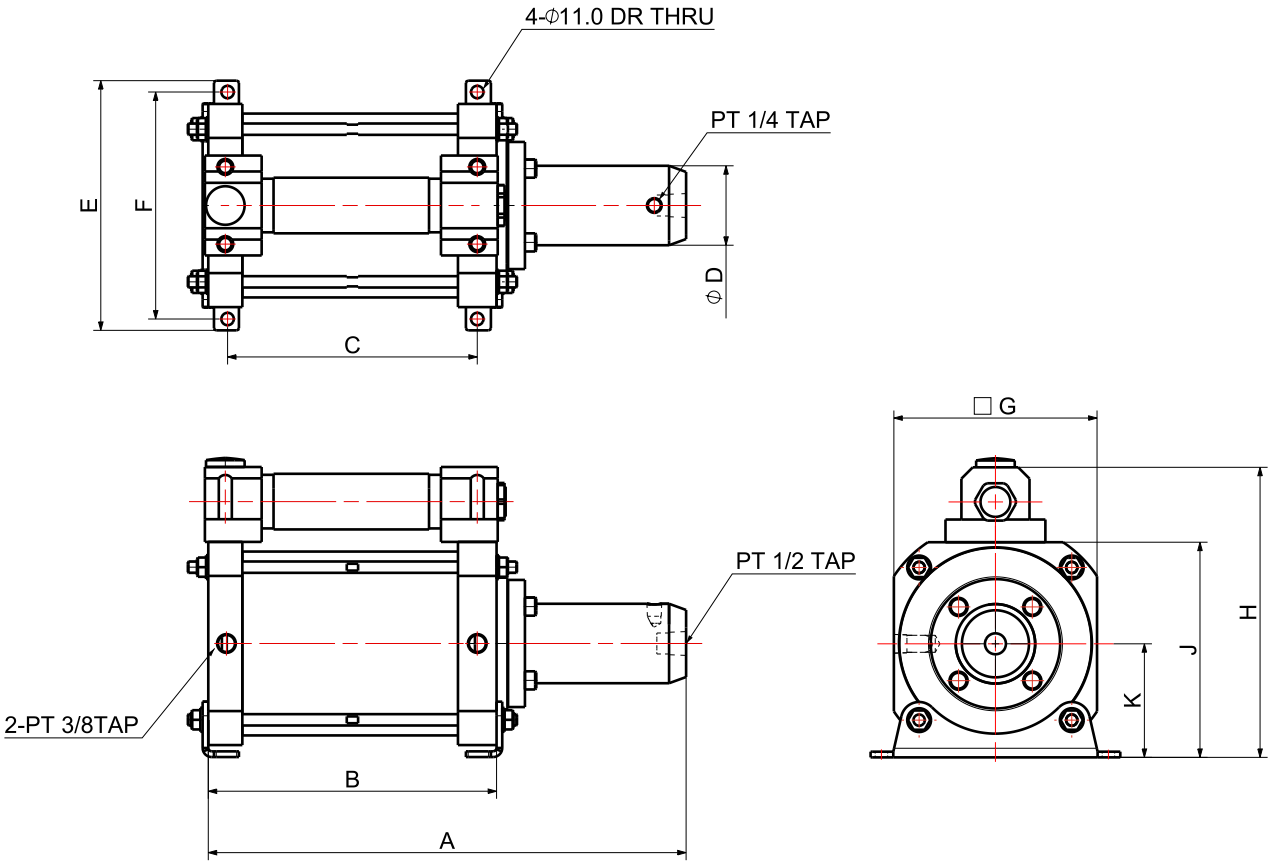

직압식 Direct compressive force

토출량 – 20cc ≥ 필요유량
Discharge rate – 20cc ≥ needed flux

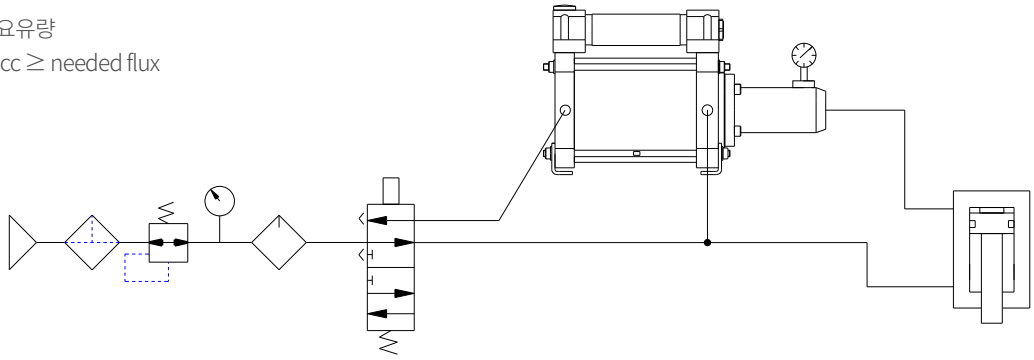

예압식 Pre-compressive force

토출량 – 20cc < 필요유량
Discharge rate – 20cc < needed flux

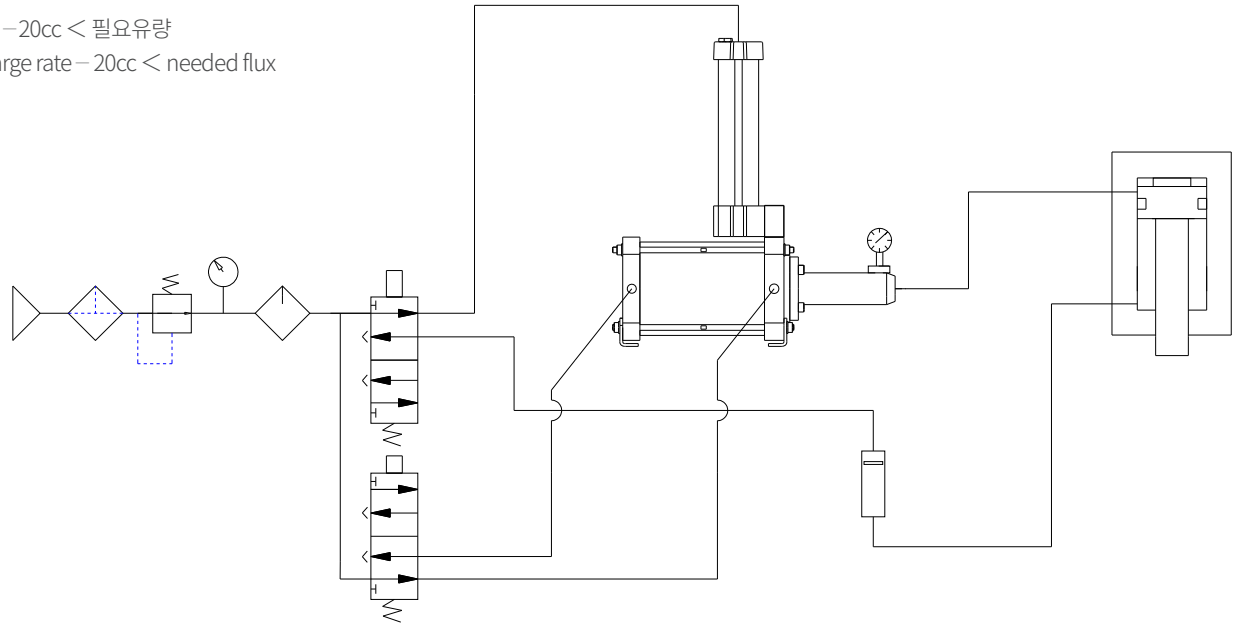

직압식 : Booster가 실린더 보다 낮게 설치된 경우

Direct compressive force : Case of Booster installed lower than cylinder

토출량 – 20cc ≥ 필요유량
Discharge rate – 20cc ≥ needed flux

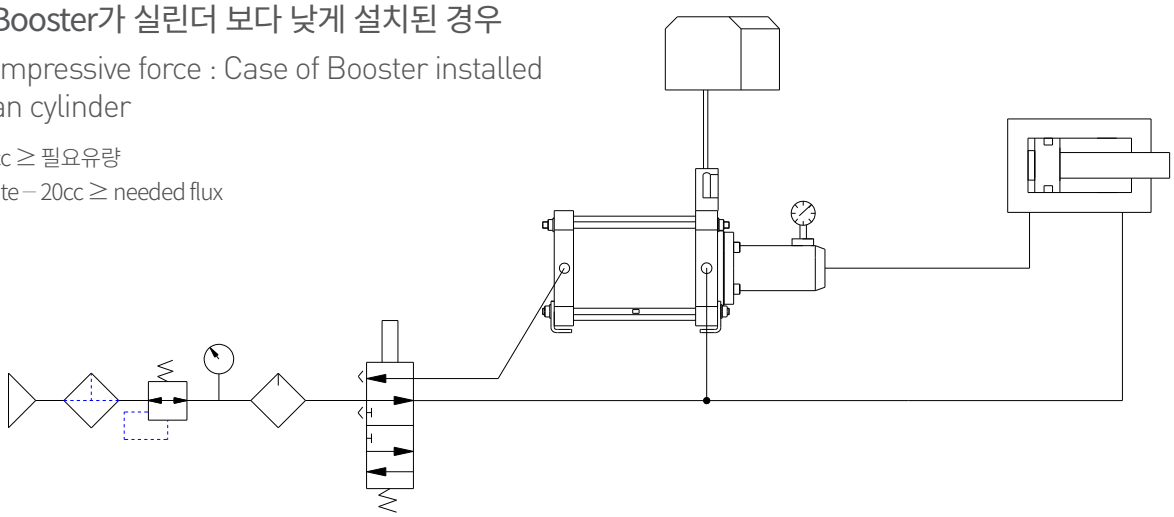

Hydraulic Intensifier

Features

1. 픽스쳐에 공급압을 높이고자 하나 메인압을 높일 수 없을 때 간단하게 해결 가능한 기기입니다.
2. 픽스쳐 안의 전체 혹은 일부분만 압력을 높여 사용할 수 있다.

1. This device is a simple solution when the mains pressure cannot be increased while trying to increase supply pressure to fixture.
2. All or part of fixture can be used by increasing the pressure within.

Specifications

1. 작동압력 : 10~160kgf/cm²
2. 사용온도 : 0~60°C

1. Operating Pressure : 10~160kgf/cm²
2. Operating Temperature : 0~60°C

› HHB - 02 02
① ②

① Intensification Ratio ② High Pressure Volume

Specification

MODEL NO.	Intensification Ratio	Input Pressure Range(kgf/cm²)	High Pressure Volume (cm³)	Max. Output Pressure (kgf/cm²)	Weight (kg)
HHB-0202	2.5 : 1	10~160	20	400	4.25
HHB-0402	4 :1	10~100	20	400	5.10
HHB-0602	6 : 1	10~66	20	400	5.85

Dimensions

MODEL NO.	DIMENSIONS (mm)						
	øA	B	C	D	E	F	G
HHB-0202	78	121	157	30	M50 x P1.5	PT 1/4	PT 3/8
HHB-0402	88	120	160	33	M50 x P1.5	PT 1/4	PT 3/8
HHB-0602	88	140	197	50	M50 x P1.5	PT 1/4	PT 3/8

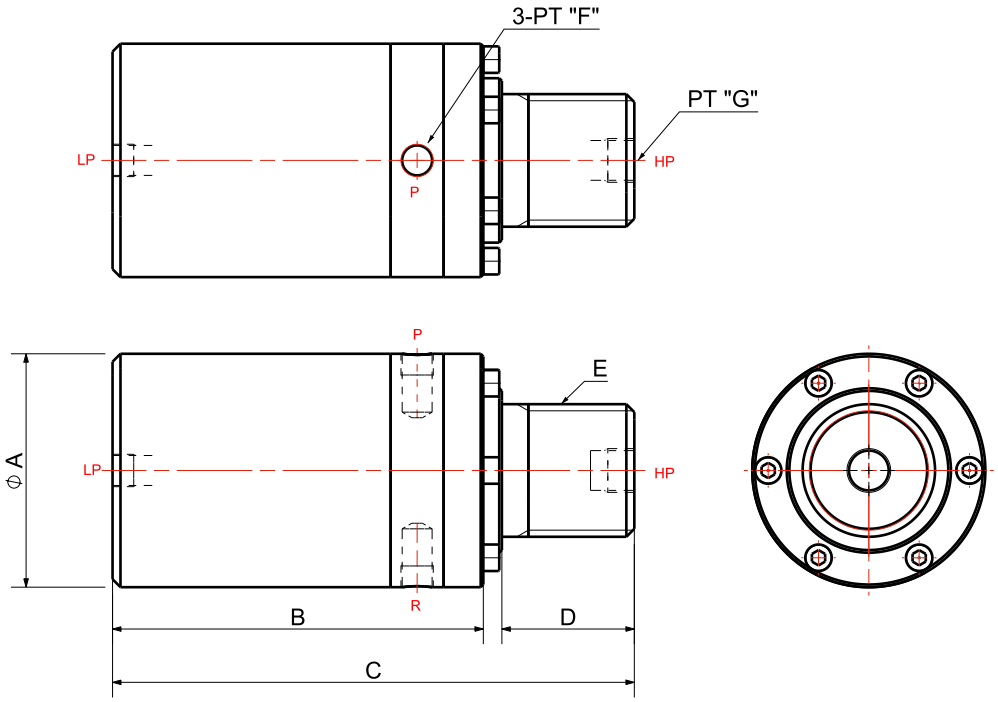

Hydraulic Intensifier

Intensifier circuit diagram by Sequence valve.

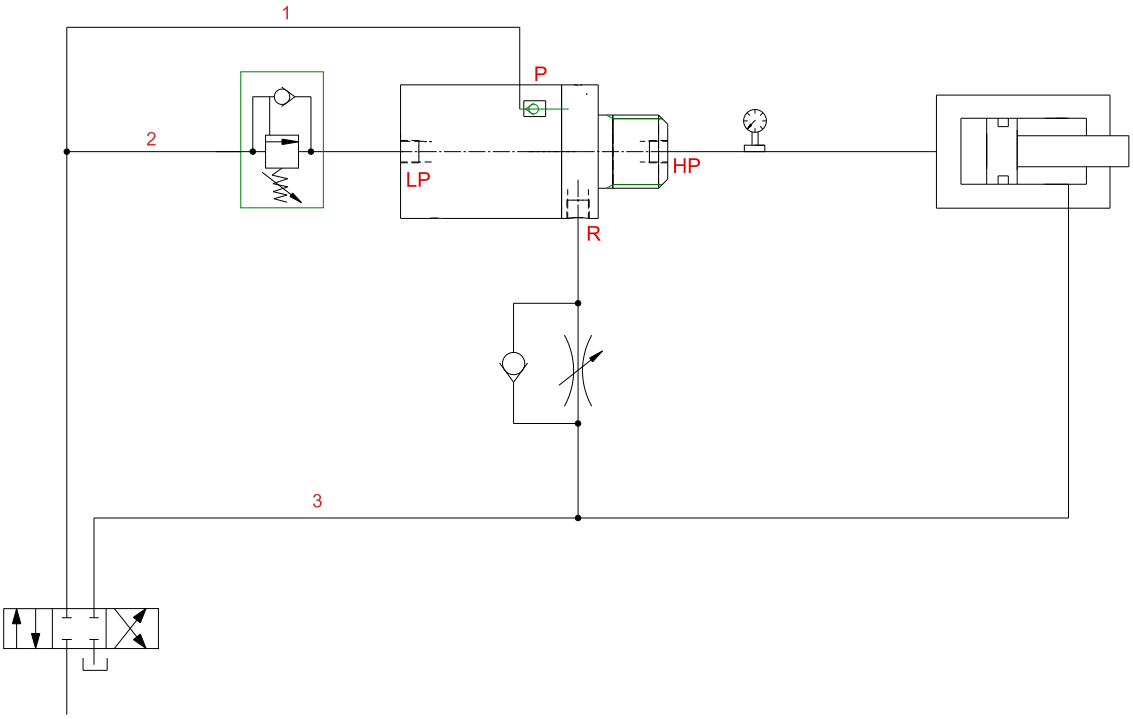

Intensifier circuit diagram by Sol valve.

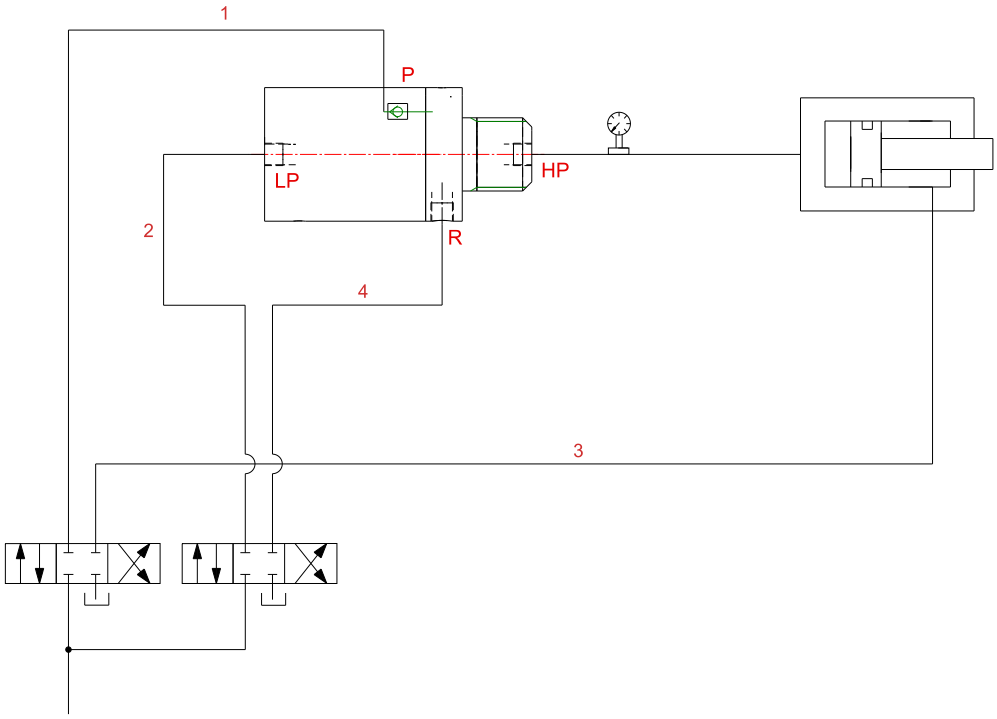

Standard Type

Gasket Type

Sequence Valve

Features

1. 2개 이상의 분기 회로 사이에 설치하여 회로안의 작동 순서를 압력에 의해 제어하는 밸브이다.
1. It is a valve that is installed between two or more branch circuits and controls the operation sequence in the circuit by pressure.

Specifications

1. 작동압력 :
   SQV-1414A/GA : 35~210kgf/cm²
   SQV-1414B/GB : 20~105kgf/cm²
   SQV-1414D/GD : 14~55kgf/cm²
2. 사용온도 : 0~60°C

1. Operating Pressure :
   SQV-1414A/GA : 35~210kgf/cm²
   SQV-1414B/GB : 20~105kgf/cm²
   SQV-1414D/GD : 14~55kgf/cm²
2. Operating Temperature : 0~60°C

Sequence Valve Standard Type (SQV-1414A/B/D)

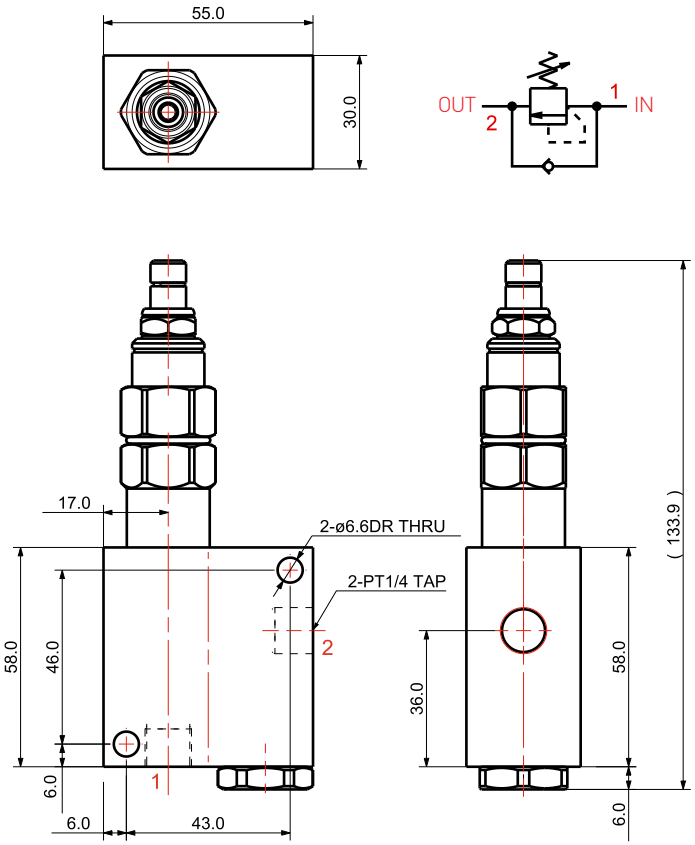

Weight : 0.86kg

Sequence Valve Gasket Type (SQV-1414GA/GB/GD)

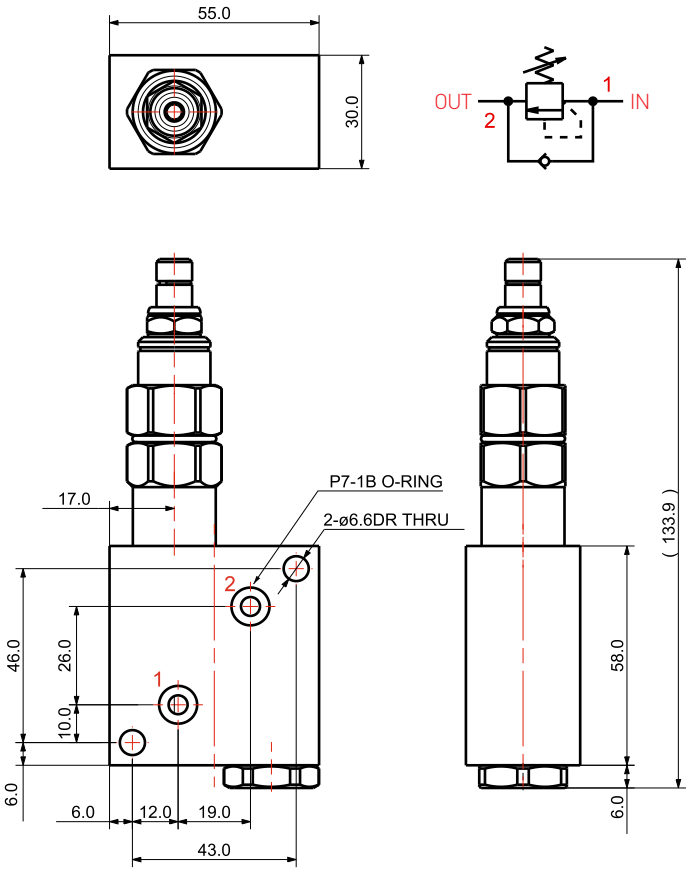

Weight : 0.89kg

Sequence Valve

Work Support, Intensifier, Sequence Valve를 조합해서 사용하는 회로

Circuit diagram using work support, Intensifier and Sequence valve.

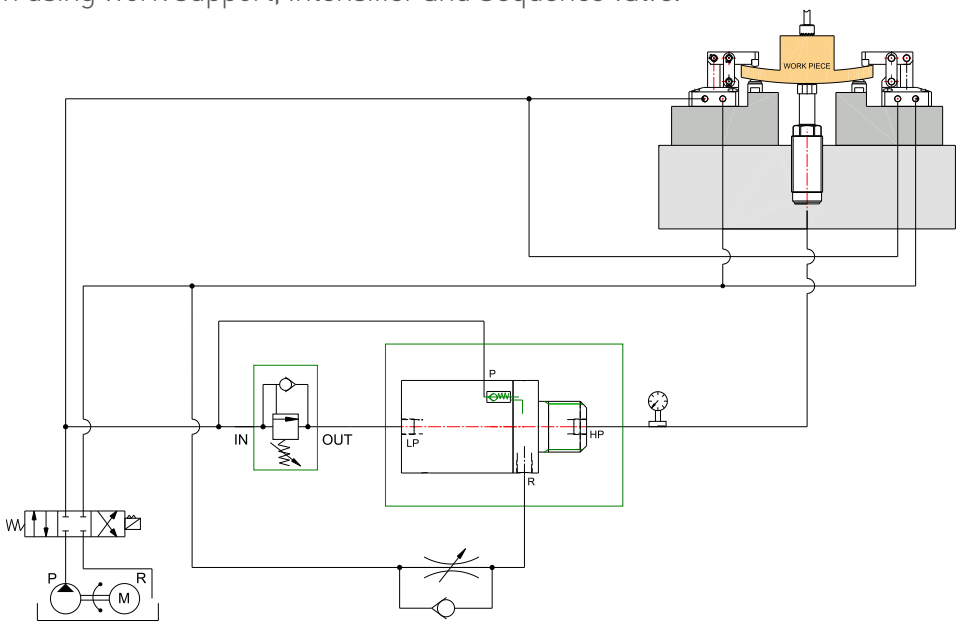

Flow Control Valve와 Sequence Valve의 구별법

Distinction of flow control valve and sequence valve.

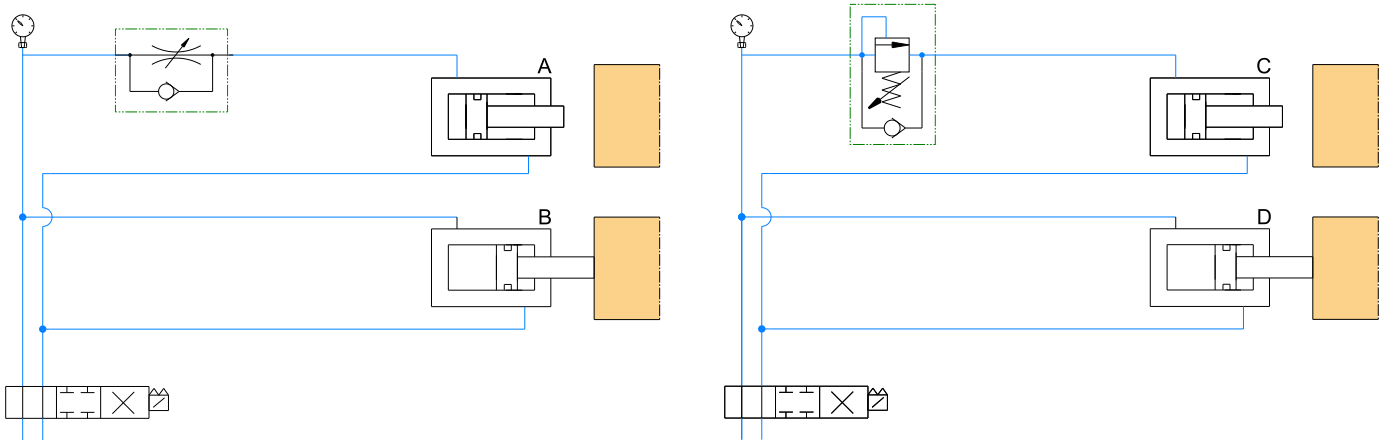

1. Flow Control Valve
실린더 B가 빠르게 움직이는 동안 실린더 A는 느리게 움직인다.
실린더 B가 공작물에 닿아 있어도 게이지에는 약 5kgf/㎠를 나타낸다.
즉, 회로의 압력 평형을 이루는 관계로 실린더 A가 도달 할때까지
실린더 B는 기다린다.

Cylinder A moves slowly during cylinder B moves fast.
Gage shows approx. 5kgf/㎠ when cylinder B contact with workpiece.
In other words, cylinder B waits until cylinder A approaches due to equal pressure of circuit.

2. Sequence Valve
실린더 D가 빠르게 움직이는 동안 실린더 C에는 전혀 유압이
공급되지 않다가 Sequence valve의 설정압에 도달하면 유압이 공급되면서
실린더 C도 움직인다. 이때 이미 실린더 D는 상당한 클램프력을 발휘한다.

Cylinder C has no hydraulic pressure during cylinder D moves fast.
When set pressure of sequence valve is reached, cylinder C moves as hydraulic is provided. Cylinder D's clamping force is already very high.

Flow Control Valve Block Type

Features

1. 유량 조절 밸브
2. 컴팩트 사이즈

1. Controlling hydraulic flow
2. Compact size

› SVB - 0014G

› SVB - 0018

› SVB-0014G

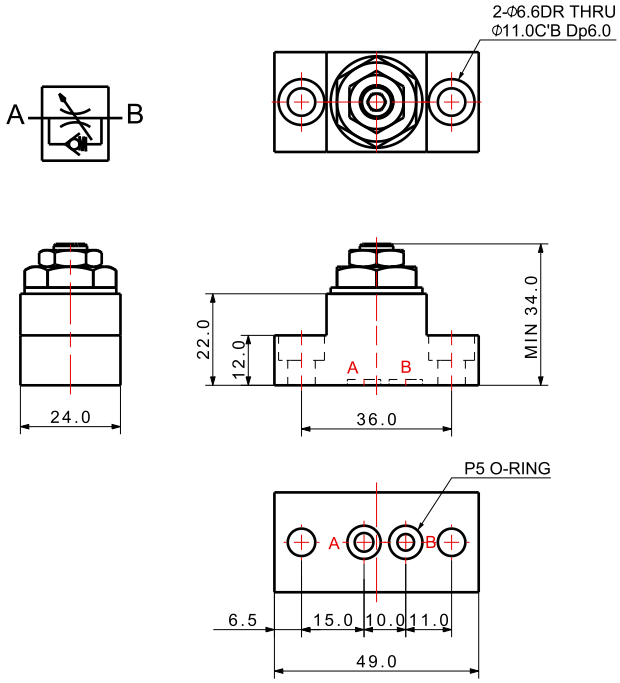

› SHB-0014G

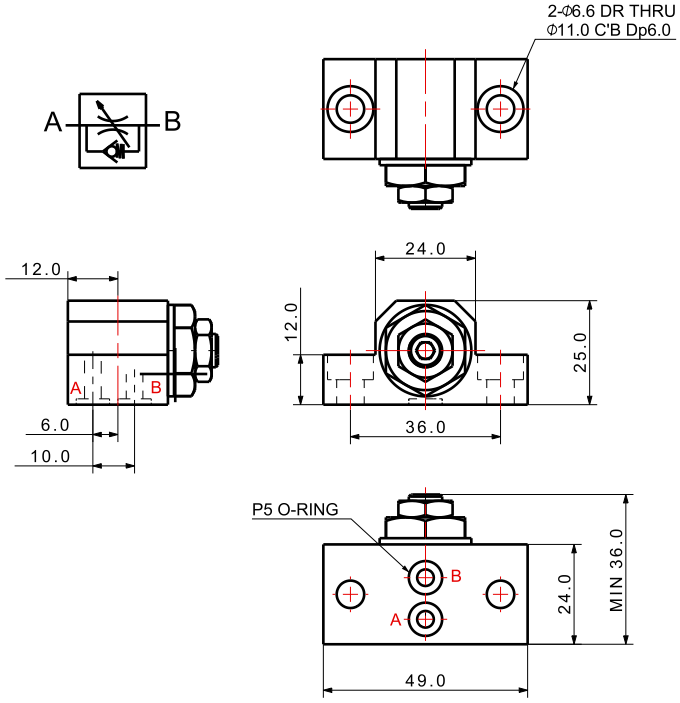

› SVB-0018

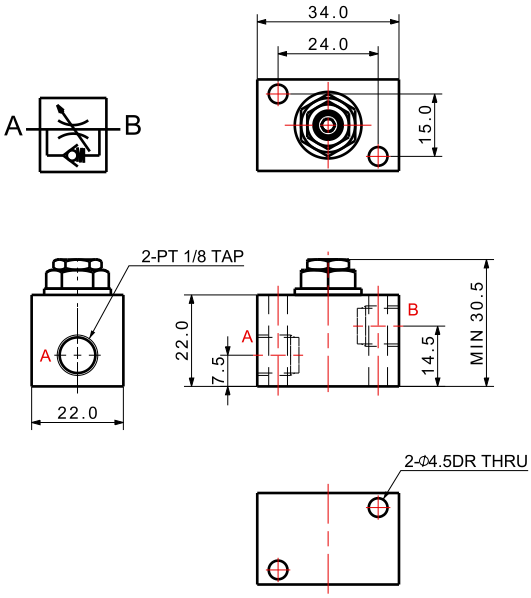

› SVB-0018G

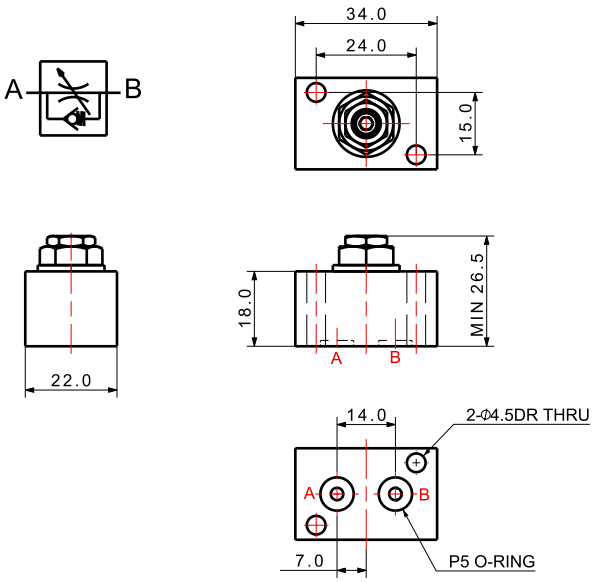

Direction Valve

Features

1. 작동상에 좁은 공간을 차지함으로 치공구에 다양하게 사용할 수 있다.
2. 비교적 간단한 구조로 되어 있어 가격이 저렴하다.

1. It occupies a small space in operation and can be used various ways in jig & fixture.
2. Simple structure and inexpensive.

Specifications

1. 사용압력 : 0~100kgf/cm²
2. Seal 재료 : 니트릴 고무
3. 무게 : 2.3kg

1. Operating Pressure : 0~100kgf/cm²
2. Seal Material : Nitrile rubber
3. Weight : 2.3kg

› DCV - 30 40
① ②

① 3 Position ② 4 Ways

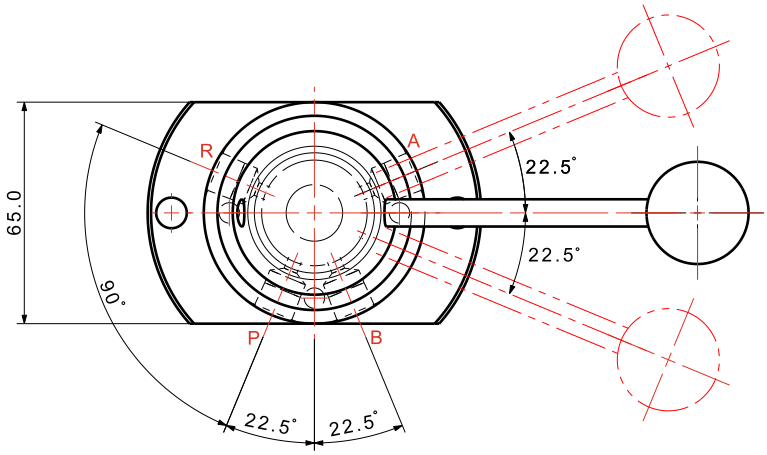

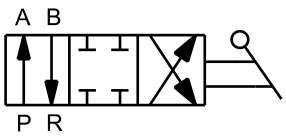

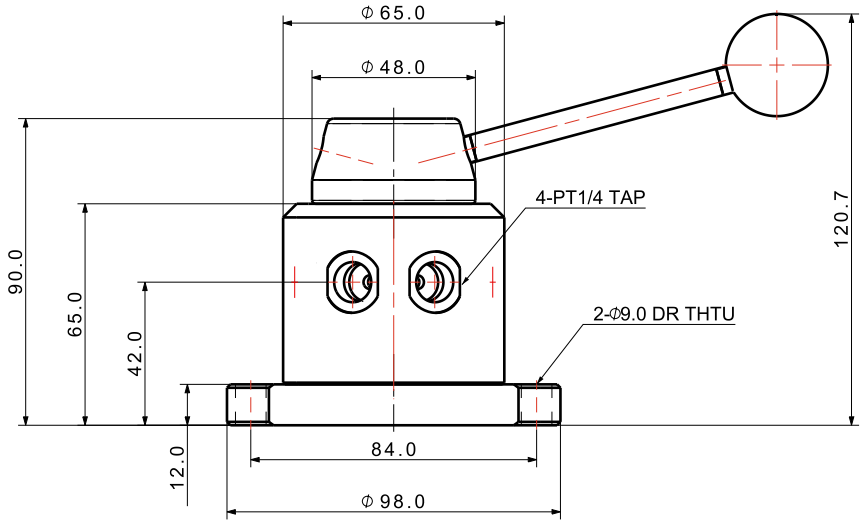

Swivel Pad

Application

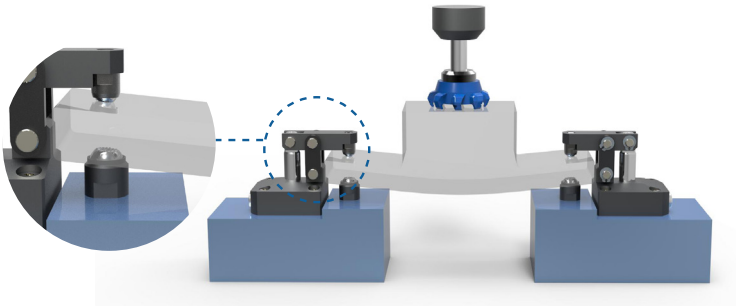

Features

1. 평탄하지 않은 공작물 클램핑에 사용된다.
2. 클램핑으로 인한 소재의 변형을 해결할 수 있다.
3. 패드 볼은 9도로 움직인다.
4. 패드 볼 표면은 평면과 다이아몬드 형상 2종이 있다.
5. 클램핑력을 향상 시킨다.
6. 불규칙하게 변하는 클램핑 면에 적절하게 대응한다.

1. It is used for clamping an uneven workpiece.
2. The deformation of the material caused by the clamping can be solved.
3. Pad ball moves in 9 degrees.
4. The pad ball surface provides two types - a flat and a diamond shape.
5. Improves the clamping force.
6. Corresponds to irregularly changing clamping surfaces.

› SPF / D - 08 00
SPF / D - 08 25
① ②

① F=Flat, D=Diamond ② Screw size

Tap Type-Flat Pad

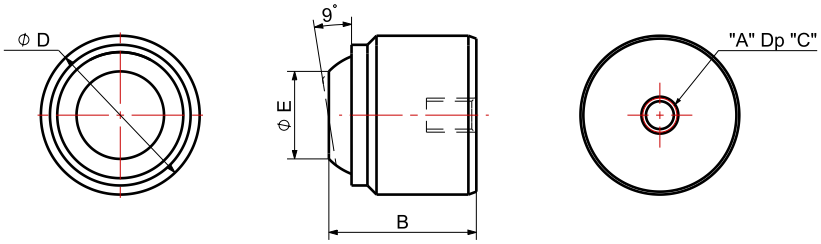

MODEL NO.	DIMENSIONS (mm)						
	A	B	C	øD	øE	Max Load Capacity	TYPE
SPF-0313	M3	13	3	14	7.7	0.8ton	Flat
SPF-0419	M4	19	5	20	10.3	0.8ton	Flat
SPF-0527	M5	27	7	30	20.5	7.9ton	Flat

Tap Type-Diamond Pad

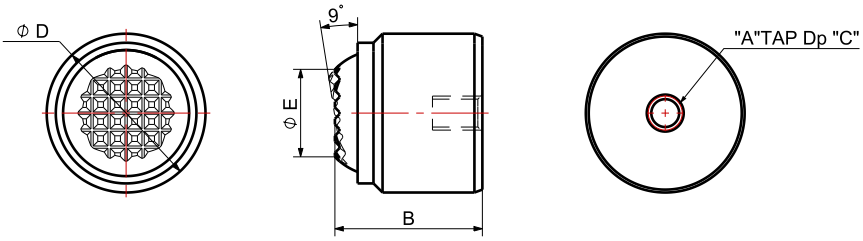

MODEL NO.	DIMENSIONS (mm)						
	A	B	C	øD	øE	Max Load Capacity	TYPE
SPD-0313	M3	13	3	14	7.7	0.8ton	Diamond
SPD-0419	M4	19	5	20	10.3	0.8ton	Diamond
SPD-0527	M5	27	7	30	20.5	7.9ton	Diamond

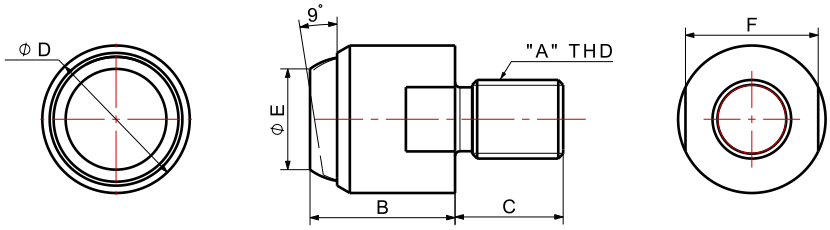

Bolt Type-Flat Pad

MODEL NO.	DIMENSIONS (mm)							
	A	B	C	øD	E	F	Max Load Capacity	Type
SPF-0600	M6x1.0P	13	8	13	7.7	11	0.8ton	Flat
SPF-0800	M8x1.25P	12.5	8	14	7.7	11	0.8ton	Flat
SPF-0800-A	M8x1.25P	20.5	10	20	10.3	17	2.1ton	Flat
SPF-0815	M8x1.25P	12.5	15	14	7.7	11	0.8ton	Flat
SPF-0825	M8x1.25P	12.5	25	14	7.7	11	0.8ton	Flat
SPF-1000	M10x1.5P	20.5	10	20	10.3	17	2.1ton	Flat
SPF-1015	M10x1.5P	20.5	15	20	10.3	17	2.1ton	Flat
SPF-1030	M10x1.5P	20.5	30	20	10.3	17	2.1ton	Flat
SPF-1200	M12x1.75P	20.5	12	20	10.3	17	2.1ton	Flat
SPF-1235	M12x1.75P	20.5	35	20	10.3	17	2.1ton	Flat
SPF-1600	M16x2.0P	29.5	16	30	20.5	27	7.9ton	Flat
SPF-1640	M16x2.0P	29.5	40	30	20.5	27	7.9ton	Flat

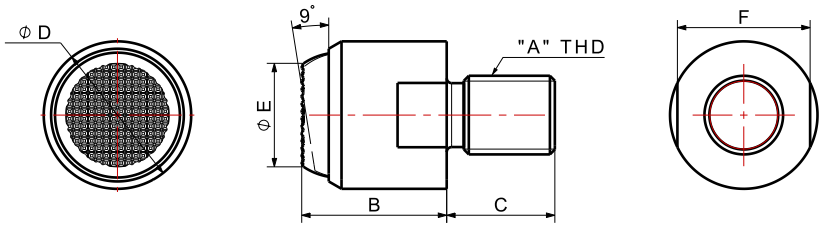

Bolt Type-Diamond Pad

MODEL NO.	DIMENSIONS (mm)							
	A	B	C	øD	E	F	Max Load Capacity	Type
SPD-0600	M6x1.0P	13	8	13	7.7	11	0.8ton	Diamond
SPD-0800	M8x1.25P	12.5	8	14	7.7	11	0.8ton	Diamond
SPD-0800-A	M8x1.25P	20.5	10	20	10.3	17	2.1ton	Diamond
SPD-0815	M8x1.25P	12.5	15	14	7.7	11	0.8ton	Diamond
SPD-0825	M8x1.25P	12.5	25	14	7.7	11	0.8ton	Diamond
SPD-1000	M10x1.5P	20.5	10	20	10.3	17	2.1ton	Diamond
SPD-1015	M10x1.5P	20.5	15	20	10.3	17	2.1ton	Diamond
SPD-1030	M10x1.5P	20.5	30	20	10.3	17	2.1ton	Diamond
SPD-1200	M12x1.75P	20.5	12	20	10.3	17	2.1ton	Diamond
SPD-1235	M12x1.75P	20.5	35	20	10.3	17	2.1ton	Diamond
SPD-1600	M16x2.0P	29.5	16	30	20.5	27	7.9ton	Diamond
SPD-1640	M16x2.0P	29.5	40	30	20.5	27	7.9ton	Diamond

› CP - 10

› CP - 31

› CP - 32

› CP - 12

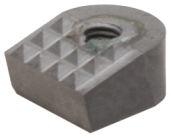

› CP - 13

Tungsten Carbide Gripper Pad(초경패드)

Features

텅스텐 카바이드로 된 재질에 의해 일반 패드보다 클램프력이 30% 향상된다.

The material made of tungsten carbide improves the clamping force by 30% compared to general pads.

Application

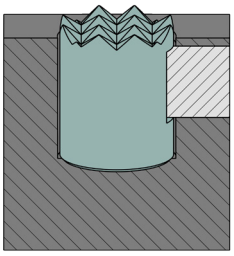

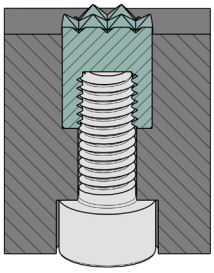

› CP - 10

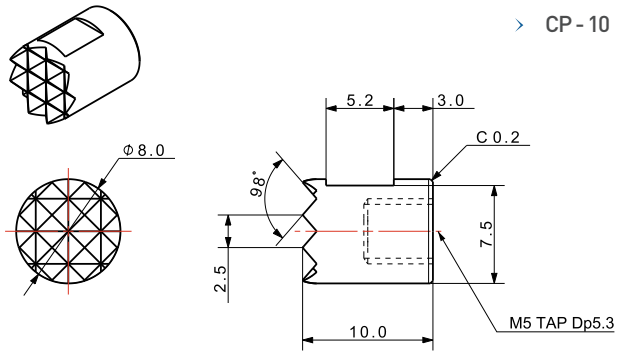

› CP - 31

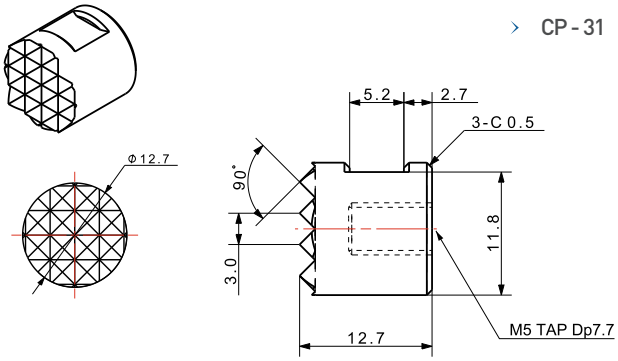

› CP - 32

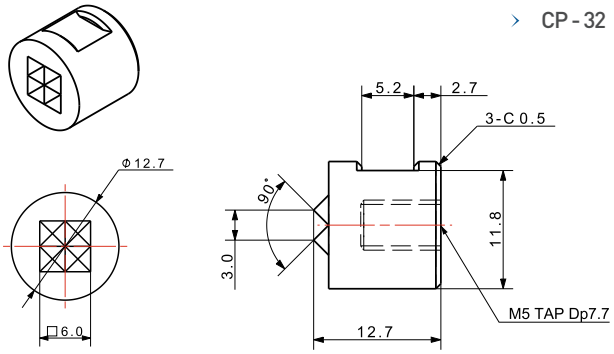

› CP - 12

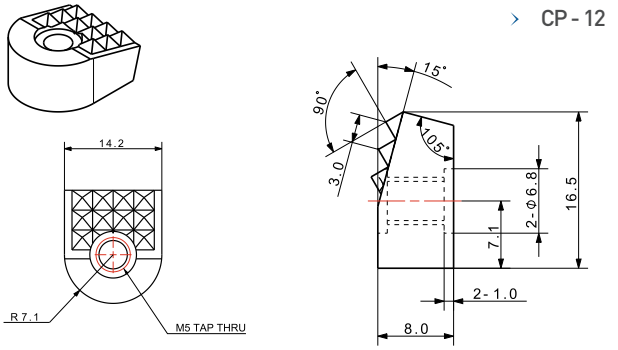

› CP - 13

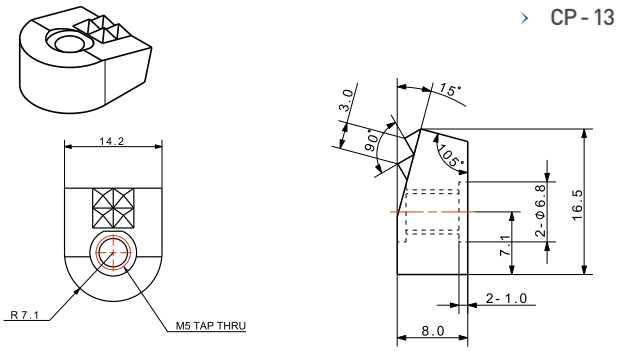

› CP - 42

› CP - 40

› CP - 21

› CP - 41

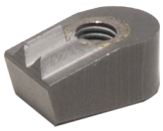

› CP - 22

› CP - 43

Tungsten Carbide Gripper Pad(초경패드)

Features

텅스텐 카바이드로 된 재질에 의해 일반 패드보다 클램프력이 30% 향상된다.

The material made of tungsten carbide improves the clamping force by 30% compared to general pads.

› CP - 42

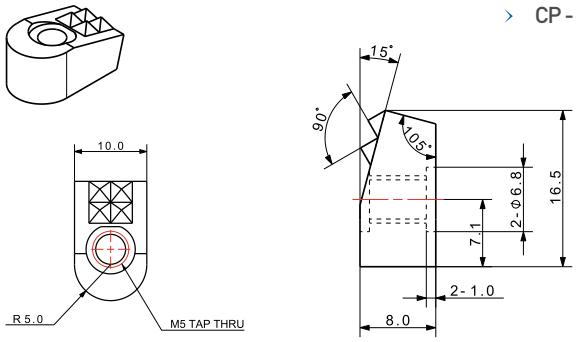

› CP - 40

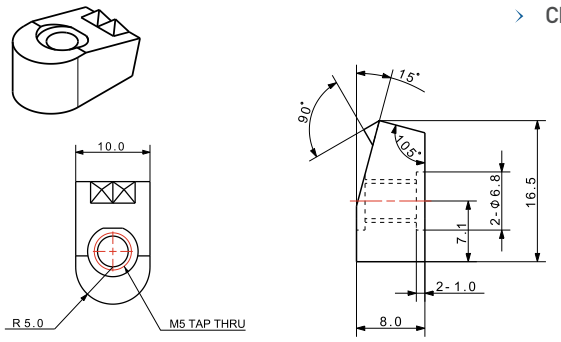

› CP - 21

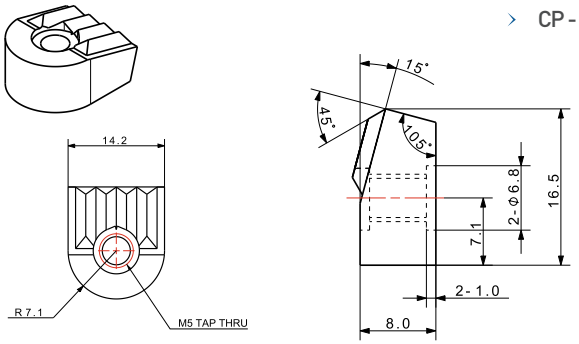

› CP - 41

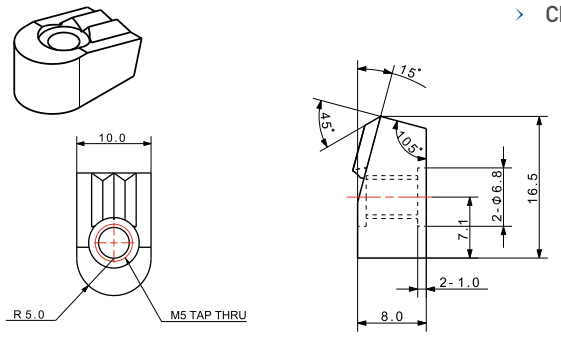

› CP - 22

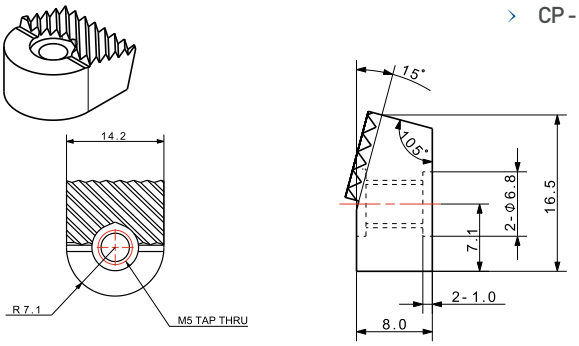

› CP - 43

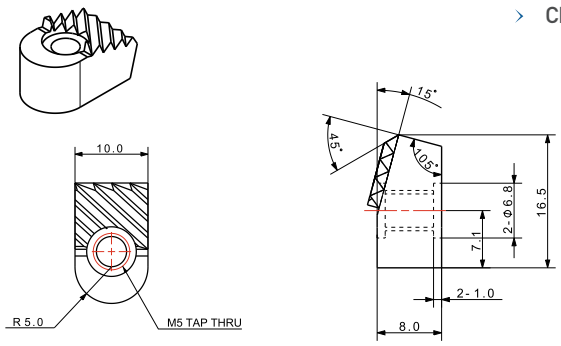

Mounting Base Accessories

› MBR / S - 20 10
① ② ③

① R=Round, S=Square ② Threaded Diameter ③ Thickness

Application

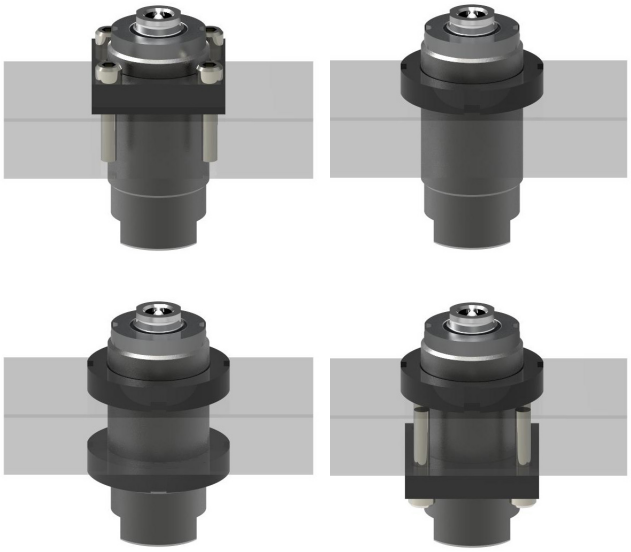

› MBR - □□□□

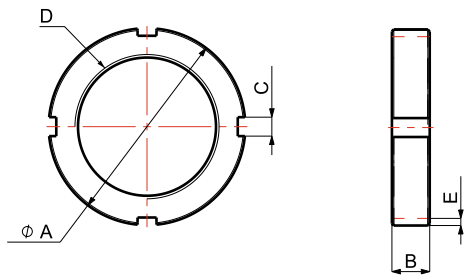

› MBS - □□□□

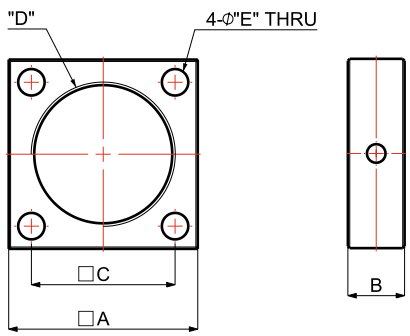

Dimensions

MODEL NO.	DIMENSIONS (mm)				
	øA	B	C	D	E
MBR-2010	32	10	4	M20 x P1.0	2.0
MBR-2110	32			M20 x P1.5	
MBR-2510	38		5	M25 x P1.5	
MBR-2810	40			M28 x P1.5	
MBR-3010	45			M30 x P1.5	
MBR-3210	45			M32 x P1.5	
MBR-3610	52			M36 x P1.5	
MBR-3810	52			M38 x P1.5	
MBR-4010	58		6	M40 x P1.5	2.5
MBR-4510	65			M45 x P1.5	
MBR-4811	70	11		M48 x P1.5	
MBR-5011	70			M50 x P1.5	
MBR-6011	80		7	M60 x P1.5	3.0
MBR-6111	80			M60 x P2.0	
MBR-6512	85	12		M65 x P2.0	
MBR-7012	92		8	M70 x P2.0	3.5
MBR-8015	105	15		M80 x P2.0	
MBR-9016	120	16	10	M90 x P2.0	4.0

MODEL NO.	DIMENSIONS (mm)				
	A	B	C	D	E
MBS-2012	30	12	22	M20 x P1.0	4.5
MBS-2112	30			M20 x P1.5	
MBS-2512	38		28	M25 x P1.5	5.5
MBS-2812	40		29	M28 x P1.5	6.7
MBS-3012	42		32	M30 x P1.5	7.0
MBS-3212	42			M32 x P1.5	
MBS-3615	45	15	36	M36 x P1.5	
MBS-3815	50		38	M38 x P1.5	
MBS-4012	50	12	40	M40 x P1.5	
MBS-4518	60	18	45	M45 x P1.5	9.0
MBS-4820	60	20		M48 x P1.5	
MBS-5012	65	12	50	M50 x P1.5	
MBS-6015	75	15	60	M60 x P1.5	
MBS-6025	75	25		M60 x P1.5	
MBS-6125	75			M60 x P2.0	
MBS-6525	80		65	M65 x P2.0	
MBS-7025	90		70	M70 x P2.0	11.0
MBS-8025	100		80	M80 x P2.0	13.0
MBS-9025	110		90	M90 x P2.0	

Customized Clamp

작업 환경에 따른 형상, 치수 및 사이즈 변경에 대한 주문제작이 가능합니다.

We provide customized shapes and sizes according to your work situation.

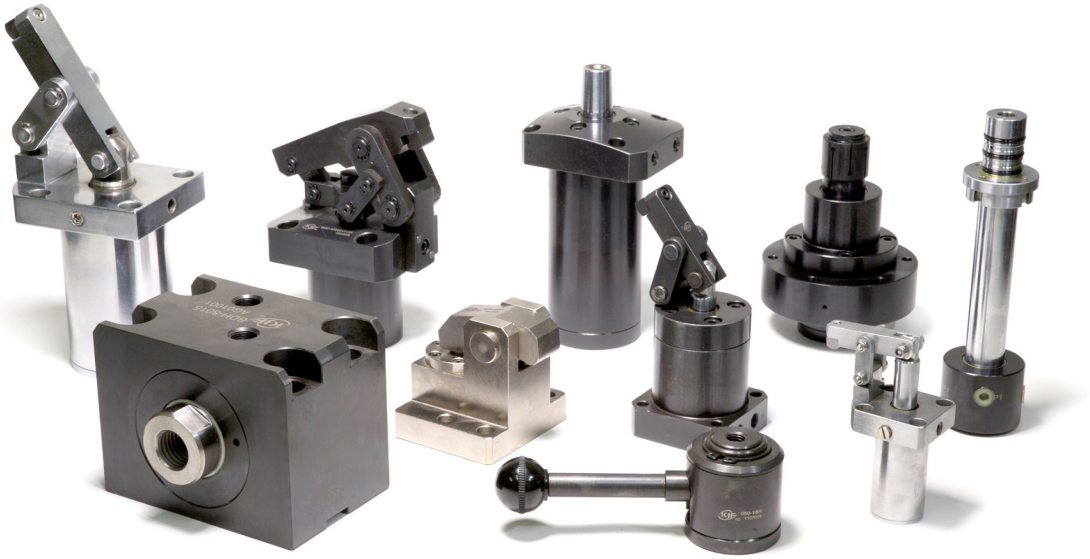

Concept Map of Hydraulic & Pneumatic Clamping Systems

Work Supports		Low Pressure Built-In Type	CWS-
		Low Pressure Flange Type	CWS- FG
		Block Type	CWD-
Hydraulic Clamps	Hinge(Link) Clamp	Low Pressure Compact Type	CHGC- G
		Gasket Type	HGC- G
		Standrad Type	HGC-
		Tube Type	HGC- T
		Double Rod Type	HGC- D
	Swing Clamp	Low Pressure Compact Type	CSD□- G
		Bottom Flange Type	SD□- F
		Top Flange Type	SD□-
	Block Clamp	Vertical Push/Pull Type	BDV-
		Vertical Push/Pull Gasket Type	BDV- G
		Vertical Double Rod Type	BDV- D
		Vertical Push Type	BPV-
		Horizontal Push/Pull Type	BDH-
		Horizontal Push/Pull Gasket Type	BDH- G
		Horizontal Double Rod Type	BDH- D
		Horizontal Push Type	BPH-
	Built-In Clamp	Round Rod Type	MTB- R
		Standard Type	MTB-
	Flange Clamp	Top Type	SDP-
		Bottom Type	SDP- F
	Threaded Body Clamp	Push/Pull Type	TBD-
		Push Type	TBP-
	Hollow Clamp		HLP-
	Edge Clamp		EDG-
	Rocker Clamp		RCS-
	Vise Clamp		STC-

Pneumatic Clamps	Hinge(Link) Clamp		HGC- A
	Swing Clamp		SD□- A
Rotary Joints		Flange Type	RTC- G
		Cartridge Type	RTC- C
		Compact Flange Type	RTC-
		Top Type	RTC-
		Male Type	RTC-
		Rotary Distributors Valve	RDV-
Boosters	Air-Hydraulic Power		HBH-
	Intensifier		HHB-
Valves	Sequence Valve	Standard Type	SQV-
		Gasket Type	SQV- G
	Flow Control Valve	Vertical Type	SVB-
		Horizontal Type	SHB-
	Direction Valve		DCV-
Work Pads	Swivel Pad	Tap Type	SP□-
		Bolt Type	SP□-
	Tungsten Carbide Gripper Pad		CP-
Accessories	Mounting Base Accessories	Round Type	MBR-
		Square Type	MBS-

품질보증 Warranty

보증기간
Warranty period

보증기간은 당사공장 출하 후 1년6개월 또는 사용개시 후 1년 중에서 가까운 쪽을 선택합니다.

The warranty period is 18 months after shipment from the factory or 12 months from the start of use, whichever is earlier.

보증범위
Warranty range

다음 항목에 해당하는 경우는 보증대상에서 제외합니다.

1. 정해진 보수, 점검을 하지 않아서 생긴 고장
2. 사용자가 잘못 사용해서 고장이 생긴 경우
3. 고장의 원인이 당사에 기인하지 않은 경우
4. 기타 천재지변에 의해 발생한 고장
5. 소모성 부품 및 부품 교체 비용
6. 제품의 고장에 의하여 유발되는 손해 발생

The following items are not covered under warranty.

1. Malfunction caused by failure to perform maintenance or inspection.
2. Malfunction due to misuse of the user.
3. If the cause of the malfunction is not attributable to the company.
4. Failure caused by other natural disasters.
5. Replacement of consumable parts and costs.
6. Damage caused by product failure.

Toggle Clamps

- 토글 클램프 제품들도 구매 가능합니다.
- Toggle Clamps are available to be purchased.

Vertical Type

Horizontal Type

Push / Pull Type

Latch Type

Heavy Duty Weldable Type

Air Type